Axxis
WFL 2050

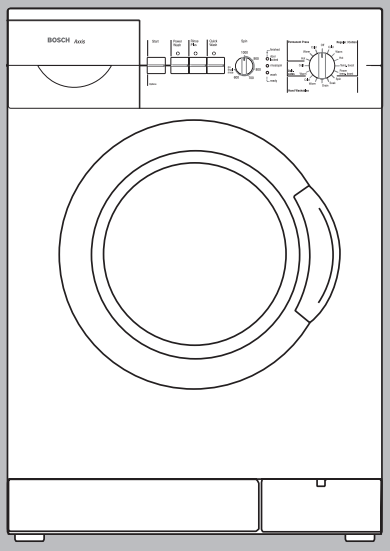

Axxis
WFL 2060

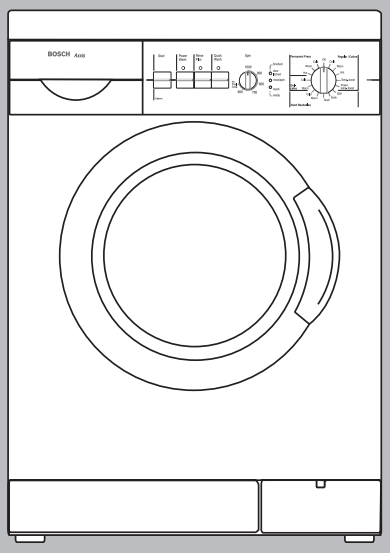

am Operating, Care and Installation Instructions

BOSCH

Table of Contents

IMPORTANT SAFETY INSTRUCTIONS 4

Operating Instructions

Disposal Information 6
Disposing of the packaging 6
Disposing of your old appliance 6
Environmental Protection / Conservation Issues . 6
Intended Use 6
Your New Washing Machine 7
Control panel 8
About Your Washing Machine 9
Before Using For the First Time 9
Using For the First Time 9
Preparing, Sorting and Loading the Laundry 10
Preparing the laundry 10
Sorting the laundry 10
Degrees of dirt 10
Loading the laundry 12
Laundry Detergents and Additives 13
Dispensing the correct amount of detergent 13
Filling laundry detergent and/ or additive dispensers 13
Selecting Programs 14
Basic programs 14
Extra cycle program selector 14
Spin speed selector 15
Additional function on spin speed selector 15
Additional options buttons 15
Washing 15
Soaking 17
Bleaching 17
Decolorizing 17
Changing a program 17
Cancelling an active program 17
When the Program has Ended 18
Unloading the laundry 18

User Maintenance Instructions

User Maintenance Instructions 19
Cleaning and Care 19
Cleaning the appliance housing and control panel 19
Cleaning the drum 19
Cleaning the detergent dispenser 19
Cleaning the drain pump 20
Cleaning water inlet strainers 22
Descaling the washing machine 23
Customer Service 23
Troubleshooting Minor Faults 24

Installation Instructions

Installation, Connection and Transport 26
Safety information 26
Factory-supplied equipment 26
Dimensions 28
Installation area 28
Built-in Installation 29
Levelling procedure 29
Removing the transport bolts 30
Hose and cable lengths 31
Water connection 31
Electrical connection 33
GROUNDING INSTRUCTIONS 33
Transport, e.g. when moving 34

KEEP THESE INSTRUCTIONS FOR FUTURE REFERENCE.

(In case of change of ownership, manual should be conveyed with the washing machine.)

IMPORTANT SAFETY INSTRUCTIONS

WARNING

To reduce the risk of fire, electric shock, serious injury or death to persons when using your washing machine, follow basic precautions, including the following.

1. BOSCH washers are provided with a manual, including Operating Instructions, User Maintenance Instructions and Installation Instructions. Read all instructions before using the washing machine.
2. Do not wash articles that have been previously cleaned in, washed in, soaked in, or spotted with gasoline, dry cleaning solvents, other flammable, or explosive substances as they give off vapors that could ignite or explode.
3. Do not add gasoline, dry cleaning solvents, or other flammable, or explosive substances to the wash water. These substances give off vapors that could ignite or explode.
4. Under certain conditions hydrogen gas may be produced in a hot water system that has not been used for 2 weeks or more. HYDROGEN GAS IS EXPLOSIVE. If the hot water system has not been used for such a period, before using a washing machine, turn on all hot water faucets and let the water flow from each for several minutes. This will release any accumulated hydrogen gas. As the gas is flammable do not smoke or use an open flame during this time.
5. Do not allow children to play on or in the appliance. Close supervision of children is necessary when the appliance is used near children.
6. Before the appliance is removed from service or discarded, remove the door and the power cord/plug.
7. Do not reach into the appliance if the wash drum is moving.
8. Do not install or store this appliance where it will be exposed to the weather.
9. Do not tamper with the controls.
10. Do not repair or replace any part of the appliance or attempt any service unless specifically recommended in the user-maintenance instructions or in published user repair instructions that you understand and have the skills to carry out.
11. Always be sure to unplug the washing machine from the eletrical supply before attempting any service. Disconnect the power cord by grasping the plug, not the cord.
12. To reduce the risk of fire, clothes, cleaning rags, mop heads and the like which have traces of any flammable substance, such as vegetable oil, cooking oil, petroleum based oils or distillates, waxes, fats, etc., must not be placed in the washing machine. These items may contain some flammable substance(s) after laundering, which may smoke or catch fire by itself.
13. Do not use bleach. Hazardous fumes can form.
14. Do not machine wash fiberglass materials (many curtains and window coverings use fiberglass materials). Small particals can remain in the washing machine and stick to fabrics in subsequent wash loads causing skin irritation.
15. Do not leave children unsupervised near the washing machine.
16. Keep pets away from the washing machine.
17. Do not insert/pull out the mains plug with wet hands.
18. Do not pull out the mains plug by tugging the cable.
19. Do not touch the loading door if washing at high temperatures.
20. Caution when draining hot water.

21. Do not climb onto the washing machine and do not lean on the open loading door.
22. Do not sit on the top of the washing machine.
23. To reduce the risk of fire or electrical shock, DO NOT use an extension cord or an adapter to connect the washing machine to the electrical power supply.
24. The washing machine must only be used for its intended purpose.
25. Always follow the fabric care instructions recommended by the clothing manufacturer.
26. Replace worn power cords and/or loose plugs.
27. Make sure that all water connections to the washing machine have shut-off valve(s) and that they are readily accessible. Close the washing machine water shut-off valve(s) at the end of each wash day.
28. Check the fill hose connections on a regular basis to assure that they are tight and not leaking.
29. Always read and follow the instructions of the manufacturer of the detergent(s), cleaning aid(s), fabric softener(s) and static eliminator(s), which you are using. Heed all warnings and precautions.
30. Store all laundry chemicals and aids in a cool dry place according to the manufacturer‘s instructions.
31. To reduce the risk of poisoning or chemical burns, keep all cleaning products out of the reach of children.
32. Do not operate the washing machine with any guards and/or panels removed.
33. Do not operate the washing machine with missing or broken parts.
34. Do not bypass any safety devices.
35. Do not operate this washing machine until you are sure:
    a. the washing machine has been installed according to the INSTALLATION INSTRUCTIONS.
    b. all connections for water, drain, electrical power and grounding are in compliance with all local codes and/or other applicable codes and requirements.
36. Failure to install, maintain and/or operate the washing machine according to the manufacturer‘s instructions may result in conditions which can lead to bodily injury and/or property damage.

Notes:

A. The IMPORTANT SAFEGUARDS and WARNINGS presented in this manual do not cover all possible conditions that may occur. Common sense, caution and care must be exercised when installing, maintaining or operating the washing machine.

B. Always contact your dealer, distributor, service agent or the manufacturer about any problems or conditions that you do not understand.

SAVE THESE INSTRUCTIONS

Please read this instruction manual and all other information accompanying the washing machine before operating the appliance.

Please retain all documents for future reference or for a subsequent appliance owner.

Disposal Information

Disposing of the packaging

The shipping package has protected your new appliance on its way to your home. All packaging materials are environment-friendly and recyclable. Please contribute to a better environment by disposing of packaging materials in an environmentally conscious manner.

Please ask your dealer or local authority about best means of disposal.

⚠ DANGER OF SUFFOCATION! ⚠

Keep children away from shipping carton and packaging components. Danger of suffocation from plastic film and folding cartons.

Disposing of your old appliance

Old appliances are not worthless rubbish! Environment-conscious recycling can reclaim valuable raw materials.

⚠ DANGER OF FATAL INJURY! ⚠

On out-of service appliances, unplug mains plug. Cut off power cord and discard with mains plug.

To prevent playing children from becoming trapped and endangered, ensure that the door locking mechanism is disabled.

Environmental Protection / Conservation Issues

Your washing machine uses water, energy and detergent efficiently, thereby protecting the environment and reducing your household costs.

Using your washing machine in an efficient and environmentally friendly manner:

- Avoid using too much detergent.
  Use detergent recommended for high efficiency and front-loading washers.
- Add detergent according to the degree of soiling, amount of laundry and water hardness, and observe the detergent manufacturer's instructions.

Intended Use

Your washing machine is intended:

- For domestic use only.
- For washing machine-washable fabrics in washing water.
- For operation using cold and hot (140 ˚F / 60 ˚C) tap water and conventional laundry detergents and additives that are suitable for use in washing machines.

Your New Washing Machine

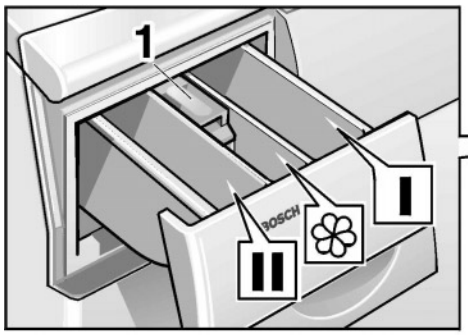

Filling laundry detergent and/or additive dispensers

Dispenser **I**:
Detergent for soaking agent.

Dispenser **II**:
Detergent for wash, stain remover.

Dispenser ❀:
Cleaning product, e.g. fabric softener, fabric conditioner (do not fill above the lower edge of the insert 1).

Open the loading door ...

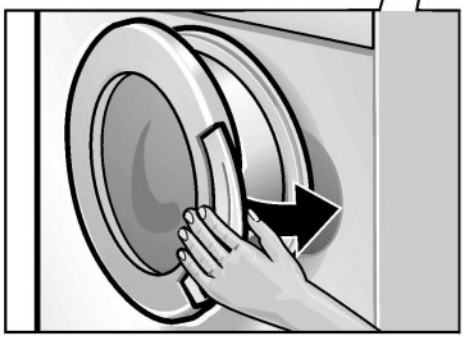

and close it.

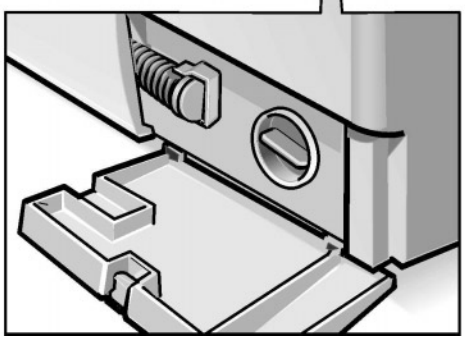

Drain water if necessary

Control panel

2. Control lights

finished flashes when the door can be opened.
door locked illuminates while the program is running.
rinse/spin illuminates while the rinsing or spinning is running.
wash illuminates when **Start** is pressed.
ready flashes when program is selected.

1. Select a program

Program selector switches the washing machine on/off. Can be rotated in either direction.

The program selector does not rotate while the program is running – the program sequence is electronically controlled.

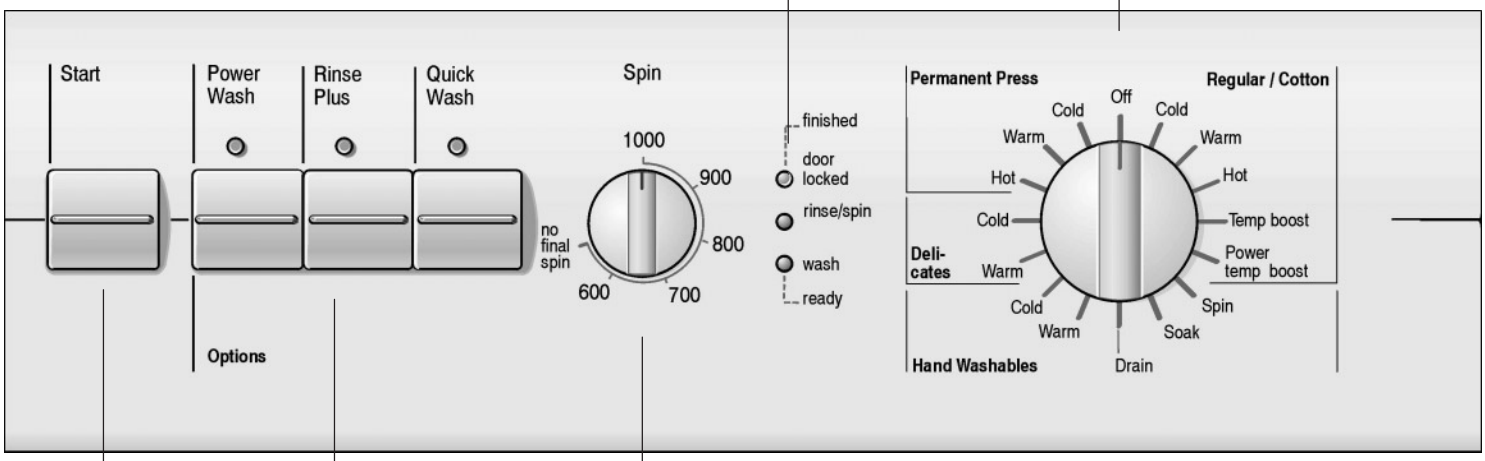

3. Set the spin speed (if desired)

Variable; must click into place at **no final spin**.

4. Press buttons for additional functions

(where required to supplement the program)

Power Wash: Extended washing time for best stain removal and cleaning results.
Rinse Plus: Additional rinsing cycle.
Quick Wash: Faster washing time for expediated cleaning results.

The control light above the option button lights up when the respective additional function is active.

To cancel the additional function: Press the button again.

5. Press the Start button

The washing process begins (program must have been selected).

About Your Washing Machine

The washing machine offers the following standard features:

- Horizontal-Axis, Tumble Action Wash System, without agitator
- Stainless Steel Inner Wash Drum
- Exceptionally Low Energy and Water Consumption
- Internal Heating Element, for Power temp boost, up to 160 ˚F (71 ˚C)
- High Spin Speeds, up to 1,000 rpm, remove more water from fabrics to reduce drying time and energy.
- 4 Fabric and 5 Temperature Settings.
- 3 special cycles
- 3 additional functions

Before Using For the First Time

The washing machine must have been installed and connected properly (refer to page 26).

Before beginning to use your washing machine for the first time:

❑ Check to make sure that the voltage on which the washing machine is to operate is the same as shown on the rating plate.

❑ Check to make sure that the water valves to the washing machine are open.

Using For the First Time

Your appliance was tested before leaving the factory. To remove any water left over from testing procedures, the first washing cycle should be carried out without laundry in the machine.

❑ Do not load any laundry.

❑ Turn on the water tap.

❑ Pull out the detergent dispenser up to the end stop.

❑ Pour approx. 1 litre / 1 ¾ pt of water into chamber **II** of the detergent dispenser.

❑ Half fill the measuring beaker with detergent and pour into chamber **II**. Do not use any special detergents for delicates or woollens (excessive foam).

❑ Close the detergent dispenser.

❑ Set the program selector to **Power temp boost**.
The **ready** control light is flashing.

❑ Press the **Start** button.
The **wash** control light comes on, and the program starts.

ⓘ **door locked** illuminates while the program is running.
The **wash** control light changes during the program to **rinse/spin**.

When the **finished** flashes:

❑ Set the program selector to **Off**.

Preparing, Sorting and Loading the Laundry

Preparing the laundry

CAUTION

Loose debris (e.g. coins, paper clips, needles, nails) can damage items of clothing as well as parts of the washing machine (e.g. drum).

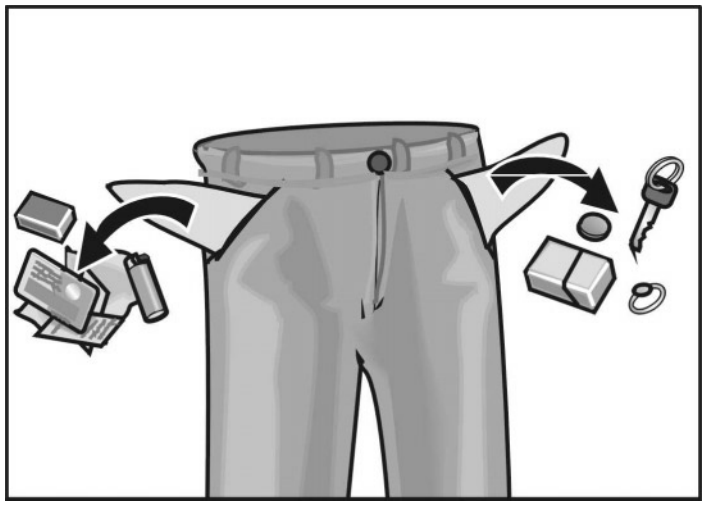

- ❑ Empty all pockets on items of clothing.
- ❑ Brush out any sand from pockets and cuffs.
- ❑ Close zip-fasteners and button up bed covers.
- ❑ Remove curtain runners or tie them up in a net / bag.
- ❑ The following items must be washed inside a net / pillow case:
  - – Extremely delicate items, e.g. fine tights, net curtains.
  - – Small items, e.g. small socks or handkerchiefs.
  - – Underwired bras (the wire may come loose during washing and cause damage).
- ❑ When washing trousers, knitwear and woven fabrics, e.g. shirts, T-shirts or sweatshirts, always turn these items inside out.

Sorting the laundry

According to colour to degree of dirt

CAUTION

Items of clothing can become discoloured. Never wash new multi-coloured items together with other items.

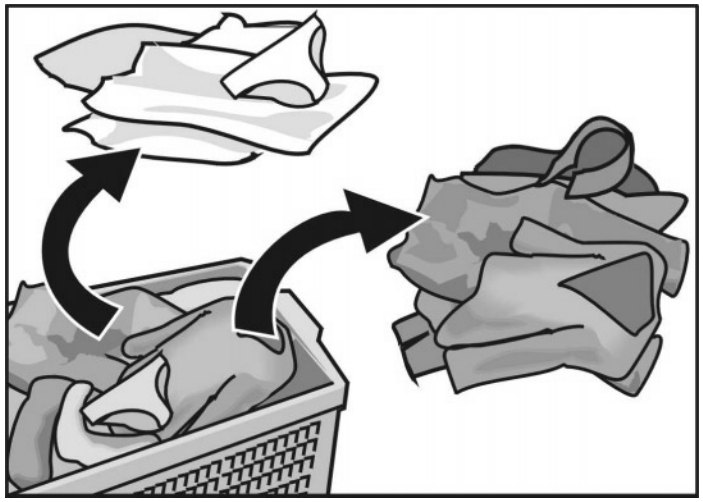

White items may become grey. Always wash white and coloured items separately.

Degrees of dirt

Slight dirt
No recognizable dirt or staining. Laundry may have some body odour.

- – Light summer clothing and sportswear that has only been worn for a few hours.
- – T-shirts, shirts and blouses that have been worn for up to one day.
- – Bed linen and guest towels that have been used for one day.

Normal dirt
Visible dirt and/or some light staining recognizable.

- – T-shirts, shirts and blouses that are very sweaty or have been worn several times.
- – Underwear that has been worn for one day.
- – Tea towels, hand towels and bed linen that have been used for up to one week.
- – Net curtains (without nicotine staining) that have not been washed for up to ½ year.

Intensive dirt

Dirt and/or staining recognizable.

- Kitchen hand towels that have been used for up to one week.
- Fabric napkins.
- Bibs.
- Children's outer clothing or football shirts and shorts with grass and soil stains.
- Working clothes such as overalls or baker's and butcher's coats.

Typical stains

- Skin fat, cooking oils / fat, sauces, mineral oil, wax (containing fat / oil).
- Tea, coffee, red wine, fruit, vegetables (bleachable).
- Blood, egg, milk, starch (containing protein / carbohydrate).
- Soot, soil, sand (pigments), red sand on tennis clothes.

Removing stains

Wherever possible, remove / pretreat stains whilst they are still fresh.

First, dab soapy water onto the stain. Do not rub.

Subsequently wash the items of clothing using the appropriate program.

Several washing cycles may sometimes be required in order to remove stubborn / dried in stains.

Sorting laundry according to their care label specifications

Fabric Types

Machine Wash, Cottons

Machine Wash, Permanent Press

Machine Wash, Delicates

Hand Wash

Temperatures

Cold

Warm

Hot

Do not wash clothes in washing machine if the care label says "Do Not Wash" or the DO NOT WASH symbol – – is on the care label.

Loading the laundry

⚠ RISK OF EXPLOSION! ⚠

Items of clothing that have been pretreated with solvent-based cleaning agents, e.g. stain remover and dry cleaning spirit, represent an explosion hazard once loaded into the washing machine. Therefore, these items must first be rinsed thoroughly by hand.

CAUTION

Loose debris in the washing machine drum can damage the laundry. Before loading the laundry, check that there is no debris in the drum.

❑ Open the loading door.

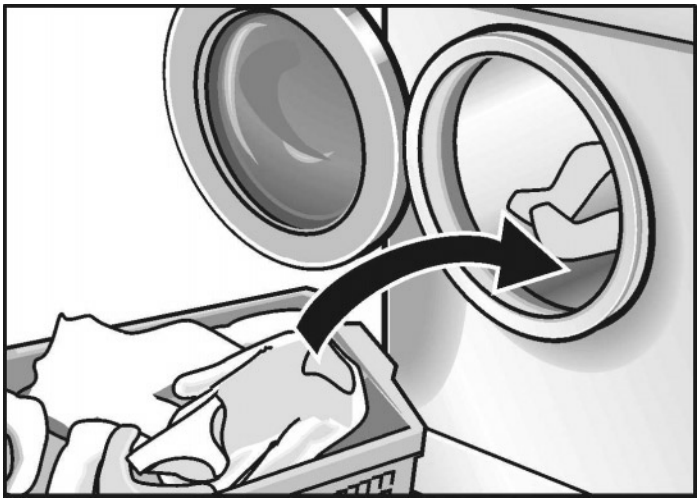

❑ Unfold the sorted items of clothing and place them loosely into the drum. Mix up large and small items.
Items of varying size will distribute better during the spin cycle.

❑ Do not exceed the maximum load: Overloading will cause poor wash results and encourage creasing.

It is recommended, for best results, that the drum be loaded by fabric type, as follows:

Full Load	Cotton and Linens
½ Load	Permanent Press, Synthetic Blends and Poly Knits
⅓ **Load**	Woolens, Delicates, Silk

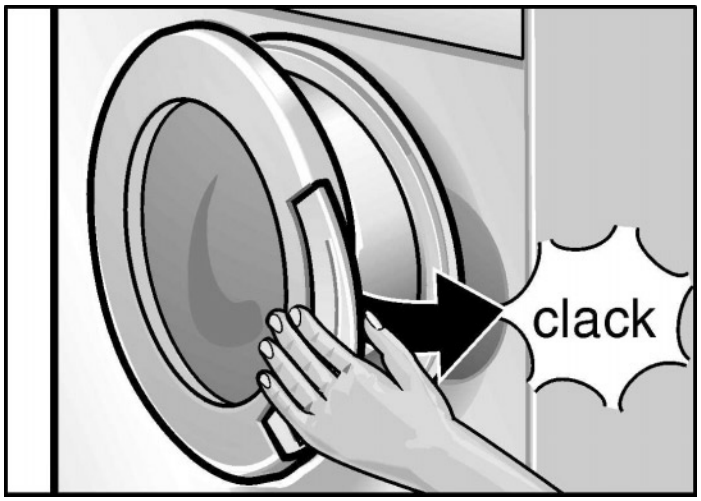

❑ Close the loading door.
Take care not to trap any items of clothing between the loading door and rubber seal.

Laundry Detergents and Additives

Dispensing the correct amount of detergent

⚠ RISK OF POISONING! ⚠

Keep detergents and additives out of the reach of children.

Dispense the detergent according to:

- the water hardness. This information can be obtained from your local water authority.
- the amount of laundry.
- the amount of soil. Information on soiling can be found on page 10.
- the specifications of the detergent manufacturer. Dispensing the correct amount of detergent relieves the strain on the environment and ensures optimum washing results.

ⓘ DO NOT use chlorine bleach in this washing machine.

❑ If it is necessary to use a detergent made for top loading washing machines, to avoid oversudsing, it is recommended that only ¼ to ½ (approx. 2–3 Tbl.) of the amount recommended by the detergent manufacturer for top loading washing machines be used. Using this lesser amount may effect the cleaning perfomance. The first time, start with ¼ of the recommended amount. Then, only if there is a low level of sudsing and your clothes are not getting clean, try a little more.

❑ Pour liquid detergent into the appropriate dispensing chamber.

Too little detergent:
The laundry is not cleaned properly and will, after a while, become grey and stiff.
Greyish brown spots (fat globules) may appear on the laundry. The heaters may calcify.

Too much detergent:
Environmentally incompatible, excessive foam reduces wash agitation causing poor washing and rinsing results.

Filling laundry detergent and/or additive dispensers

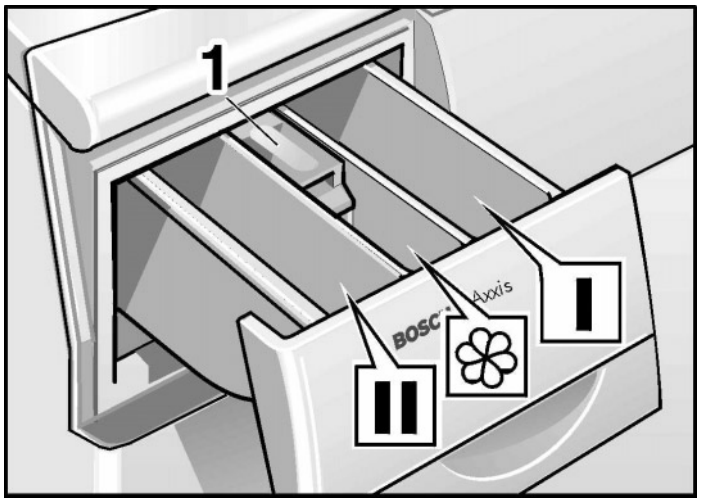

Dispenser **I**:
Detergent for soaking agent.

Dispenser **II**:
Detergent for wash, stain remover.

Dispenser ❀:
Cleaning product, e.g. fabric softener, fabric conditioner.

- Fill at least to lower edge of insert **1**.
- If the liquid additive is thick, mix with a little water before dispensing (prevents clogging of the overflow).

❑ Pull out the detergent dispenser up to the end stop.

❑ Add the detergent and/or additive.

❑ Close the detergent dispenser.

Selecting Programs

Basic programs

Select the desired program, see also the program overview.

Regular/Cotton
Regular/Cotton settings are intended to be used for colorfast sturdy, hard wearing items made from cotton or linen, such as:

- Play clothes
- Work clothes
- Sheets
- Towels
- Jeans
- T-shirt, etc.

Refer to the care label on the clothing for settings to use.

Permanent Press
Permanent Press settings are intended to be used with permanent press items and items made from cotton, linen, synthetic or blended fabrics and outer garments, such as:

- Dress shirts
- Dress pants
- Poly/cotton blend clothing
- Clothes requiring a special tumble sequence and spin speed to minimize wrinkling.

Delicates
Delicates settings are intended for use with delicate easy care items made from cotton, satin, synthetic or blended fabrics and curtains.

No spinning between rinse cycles.
We do not recommend washing these textiles with other rougher textiles.

Hand Washables
Hand Washables settings are intended for very delicate easy care items that usually require hand washing.

These cycles have been specifically designed to provide extremly gentle treatment of fabrics.
All woolens, silk or other items marked with the ”Hand Wash” symbol, (), on the care label can be safely washed in this cycle.

Temperature Settings
Following wash temperatures are available:

Power temp boost – 160 °F (71 °C)
This is the highest temperature setting. The water temperature is raised to approximately 160 °F (71 °C).

Temp boost – recommended for 145 °F (63 °C)

hot – 125 °F (52 °C)

warm – 95 °F (32 °C)

cold – 60 °F (15 °C)

Extra cycle program selector

Spin
Spin cycle for spinning hand-washed laundry.
Water is drained before the spin cycle.
Maximum spin speed: 800 r.p.m.

Soak
An intergrated soak cycle for pre-treating of heavily stained items. The soak cycle lasts 2 hours. The reached temperature is 95 °F (32 °C). It is ending with a short spin cycle. All the water is pumped out.

Drain
Water is drained after a program with the **no final spin** setting for gentle treatment of delicate laundry.

Spin speed selector

Basic setting =
Spin speed selector pointing upward at 1000 rpm.

In the **Regular/Cottons** program the fabrics will be spun at the maximum possible spin speed.

In the **Permanent Press**, **Delicates** and **Hand Washables** programs, a lower spin speed will automatically be used, regardless of the position of the spin speed selector – for the gentle washing of the laundry.

Maximum spin speeds

Revolutions per minute	Type of laundry / Extra cycle
1000	Regular/Cottons
800	Permanent Press
600	Delicates
800	Hand Washables
800	Spin

Additional function on spin speed selector

no final spin
For delicate laundry and net curtains. The laundry remains lying in the water after the final rinse.

Use this setting to avoid wrinkles, when the clothing cannot be taken out of the washing machine immediatly upon completion of the cycle.

Before the laundry can be unloaded, the **Drain** or **Spin** program must be performed.

Additional options buttons

Power Wash
Recommended for heavily soiled garments. Particulary recommended when trying to remove protein stains.
Wash time is extended.
Only cold water is introduced to the drum. The washing machine then heats the water to the selected wash temperature. By raising the temperature from cold through to the set temperature all components of the detergent are activated in stages for best stain removal and cleaning results.

Rinse Plus
When this button is depressed, an additional rinsing cycle will be added to the selected cycle. Washing time is extended accordingly.

Quick Wash
Faster wash for expediated cleaning results. Recommended for ½ load only. If both buttons for **Power Wash** and **Quick Wash** are pressed, only **Quick Wash** is running.

Washing

❑ Turn on the water taps.

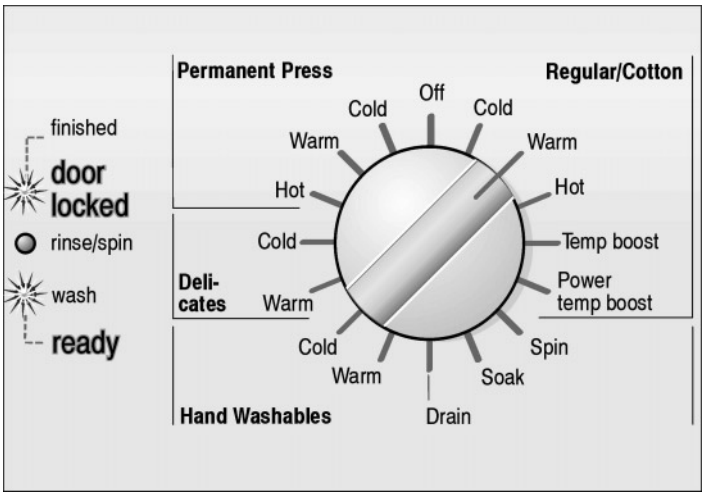

❑ Turn the program selector to the desired program.
The **ready** control light is flashing.

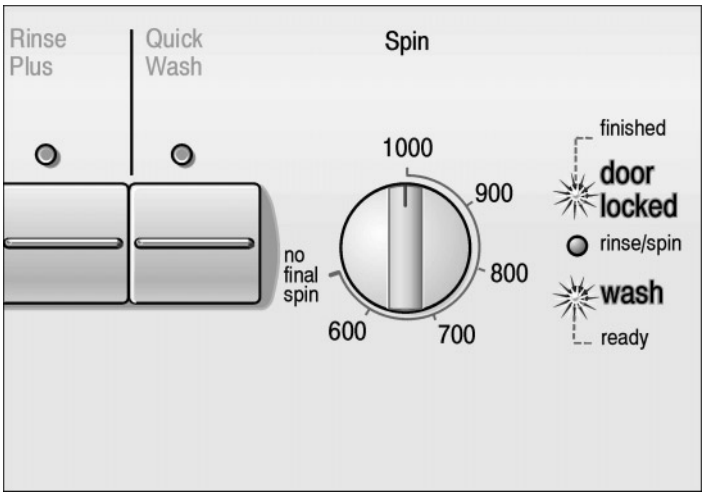

❑ Select the desired spin speed or **no final spin**.

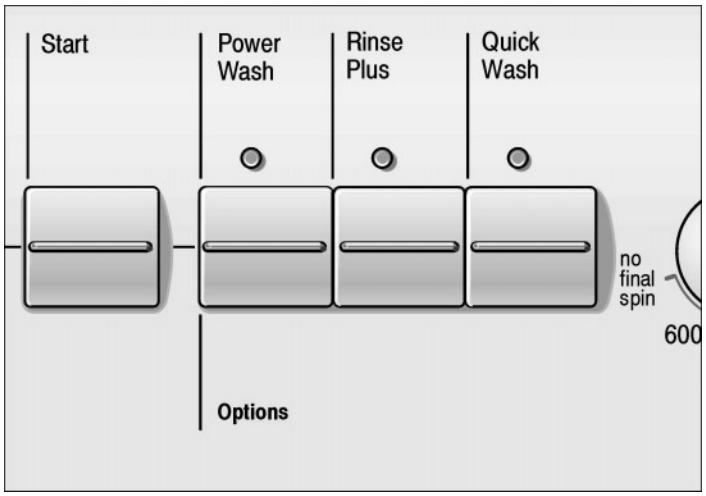

❑ Where required, press the option button(s) for additional function(s).

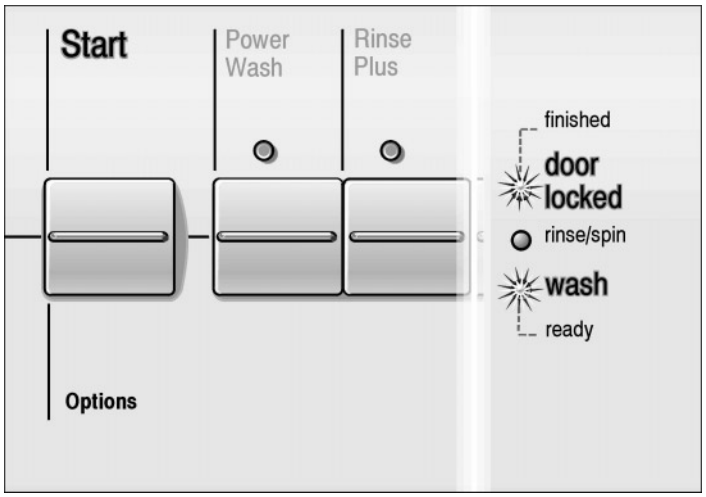

❑ Press the **Start** button.
The **wash** control light comes on, and the program starts.

The **wash** control light changes during the program to **rinse/spin**.

Soaking

The **Soak** setting is used to pre-treat heavily stained items:

- ❑ Load laundry of the same color.
- ❑ Add the soaking agent to chamber **I** according to the manufacturer's specifications.
- ❑ Turn the program selector to **Soak**.
  The **ready** control light is flashing.
- ❑ Press the **Start** button.
  The **wash** control light comes on, and the program starts.

ⓘ The soak cycle lasts 2 hours with a maintained temperature of 60 ˚F / 15 °C . It is ended with a short spin cycle. All the water is pumped out.

Bleaching

WARNING

DO NOT use chlorine bleach in this washing machine.

Decolorizing

CAUTION

Decolorants may contain sulphur or chlorine. These substances can cause parts of the washing machine to corrode. Do not decolorize items of laundry in the washing machine.

Changing a program

If you have accidentally selected the wrong program:

- ❑ Turn the program selector to **Off**.
- ❑ Turn the program selector to the desired program.
  The **ready** control light is flashing.
- ❑ Press the **Start** button.
  The **wash** control light comes on, and the new program starts.

Cancelling an active program

If you wish to prematurely end a program:

- ❑ Turn the program selector to **Off**.
- ❑ Turn the program selector to **Drain** or **Spin**.
  The **ready** control light is flashing.

For **Spin**, select the desired spin speed (but not **no final spin**).

- ❑ Press the **Start** button.
  The **wash** control light comes on, and the program starts.

When the Program has Ended

The **finished** control light is flashing.

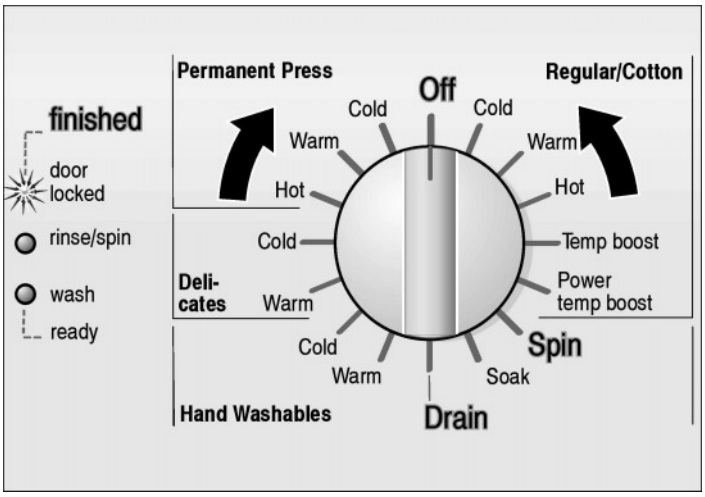

❑ Turn the program selector to **Off**,

and, when required:

❑ Select a program (**Drain** or **Spin**).

❑ Press the **Start** button.
The **wash** control light comes on, and the program starts.

The **wash** control light changes during the program to **rinse/spin**.

❑ At the end of the program option, turn the program selector to **Off**.

Unloading the laundry

When the **door locked** control light goes off:

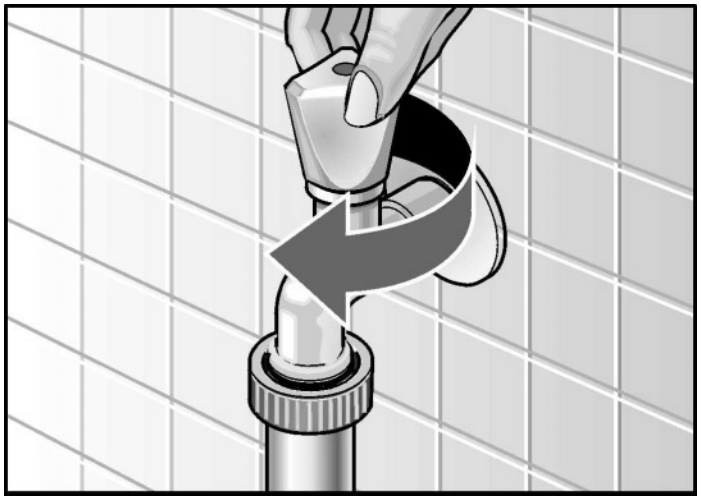

❑ Turn off the water taps.

❑ Open the loading door.

If the loading door cannot be opened:
Wait for 2 minutes (the safety function is active)
or
there is still water in the washing machine if the **no final spin** option was selected.
In this latter case, select the **Drain** or **Spin** program.

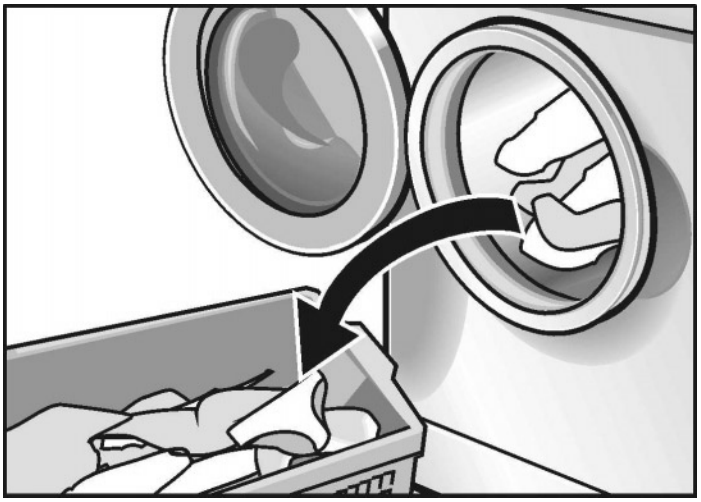

❑ Unload the laundry.

CAUTION

Check occasionally for any foreign objects (e.g. coins, paper clips) from the drum and rubber seal) – **risk of rust!**

❑ Leave the loading door open to allow the inside of the washing machine to dry out.

User Maintenance Instructions

Cleaning and Care

⚠ RISK OF ELECTRIC SHOCK! ⚠

Always disconnect the appliance from the mains before cleaning.

Never clean the washing machine with a jet of water.

⚠ RISK OF EXPLOSION! ⚠

Never use solvents to clean the appliance.

Cleaning the appliance housing and control panel

As required:

- ❑ Use hot soapy water or a mild, non-abrasive cleaning agent.
- ❑ Rub dry with a soft towel.

Cleaning the drum

In the event that rust spots have formed due to left-over debris (e.g. coins, paper clips, needles, nails):

- ❑ Use a chlorine-free cleaning agent. Follow the manufacturer's instructions. Never use steel wool.

Cleaning the detergent dispenser

In the event that residual detergents or additives have accumulated:

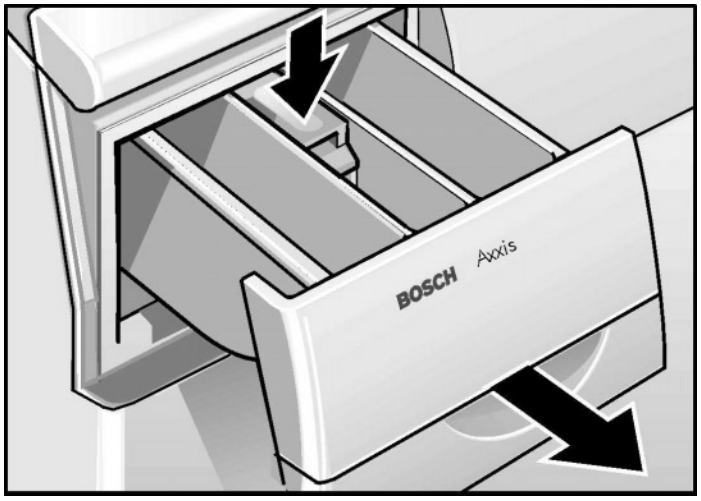

- ❑ Pull out the detergent dispenser up to the end stop, press down the indent on the insert and remove the detergent dispenser completely.

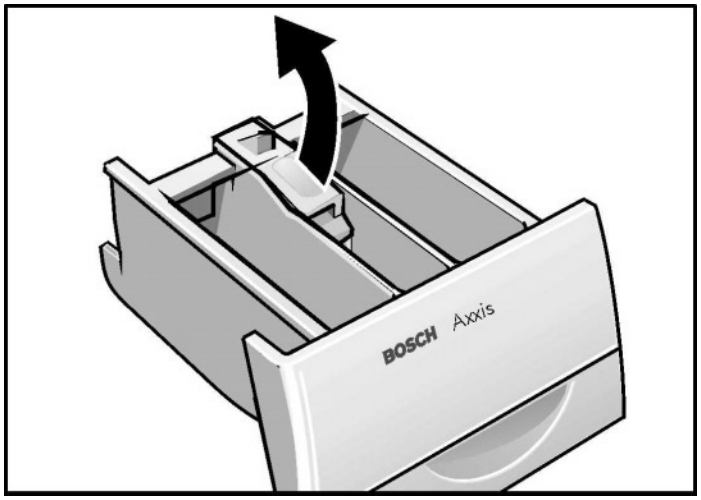

- ❑ Pull up the insert.
- ❑ Rinse the detergent dispenser under hot running water.

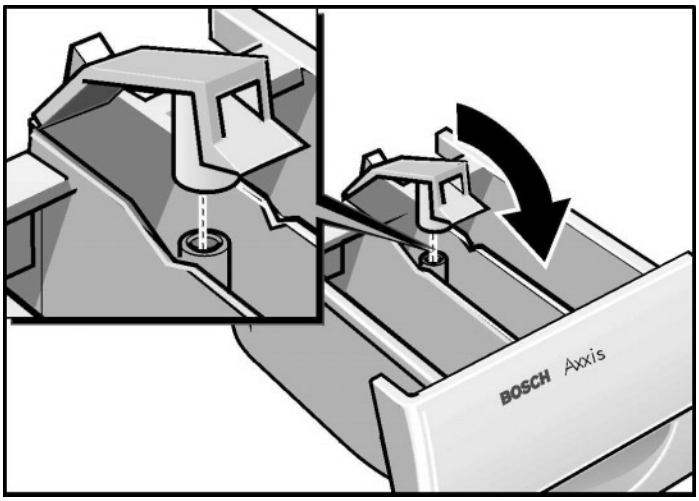

❑ Push down the insert until it clicks into place.

❑ Insert the detergent dispenser.

Cleaning the drain pump

This is necessary if the water cannot be completely drained. The pump is blocked by either loose debris or lint which accumulates if lint-giving fabrics are washed.

Draining the water

Up to 20 litres / 4.4 gal. Have a suitable container ready.

⚠ RISK OF SCALDING! ⚠

Allow the hot water to cool.
Keep children and domestic pets away from the washing machine.

❑ Turn the program selector to **Off**.

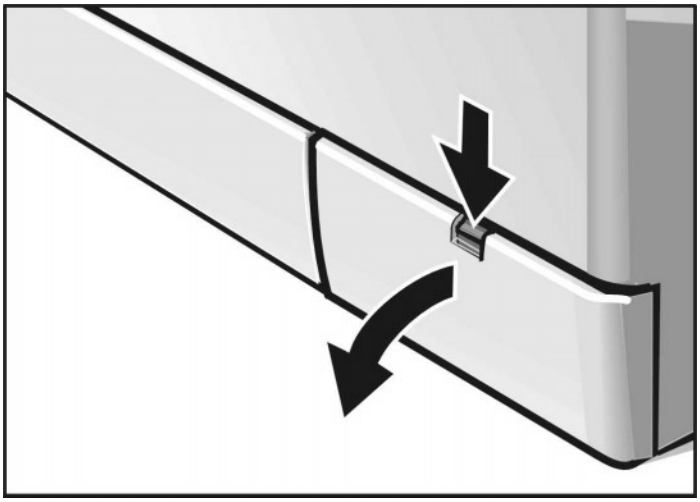

❑ Fold down the cover panel.

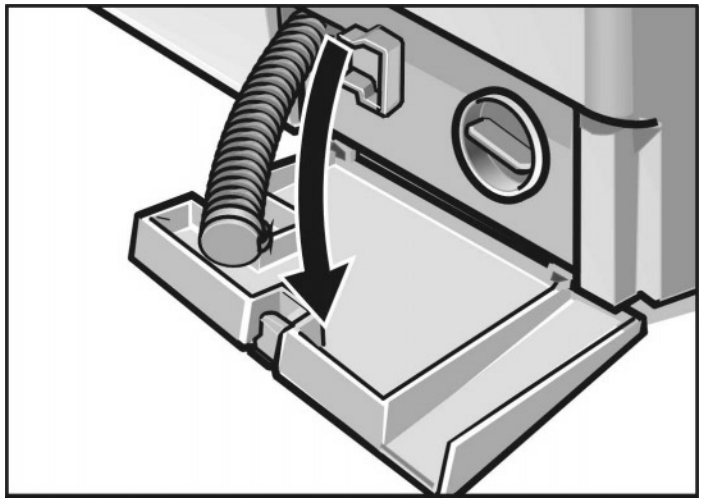

❑ Remove the drain hose from its holder and pull the hose out of the housing.

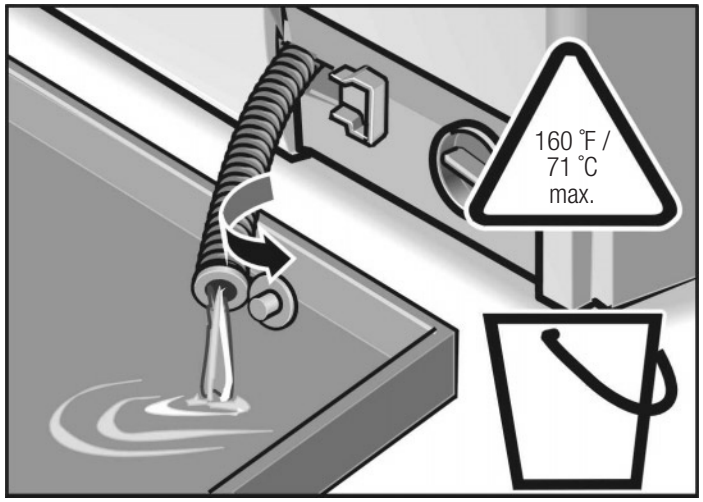

❑ Pull down the closing cap and allow the water to flow into a suitable container.

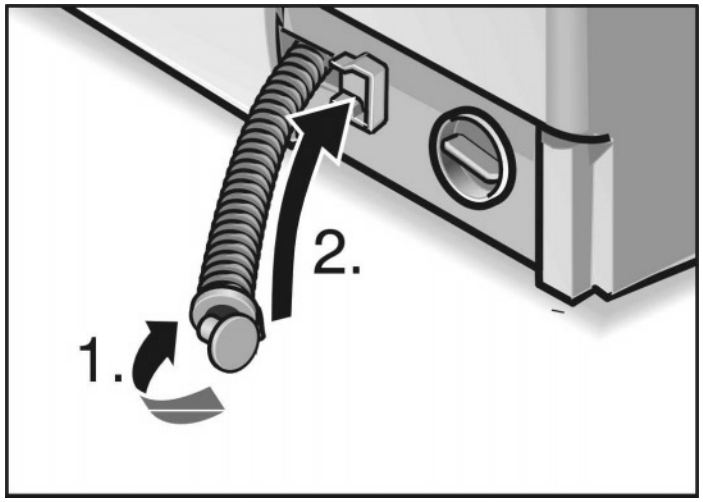

❑ Push up the closing cap (**1st**) and place the drain hose back in its holder (**2nd**).

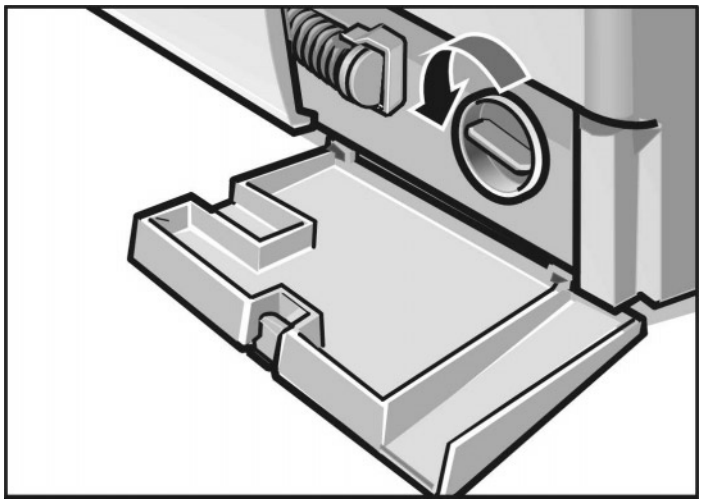

❑ Carefully remove the pump cap.

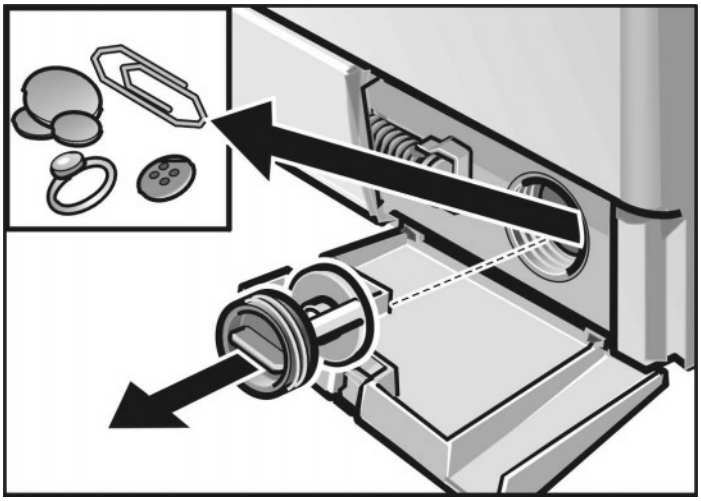

❑ Remove any loose debris / lint from inside the pump and clean the pump. The pump impeller must be able to rotate.
Clean any residual water or lint from the threads of the pump cap and pump housing.

❑ Attach and tighten the pump cap.

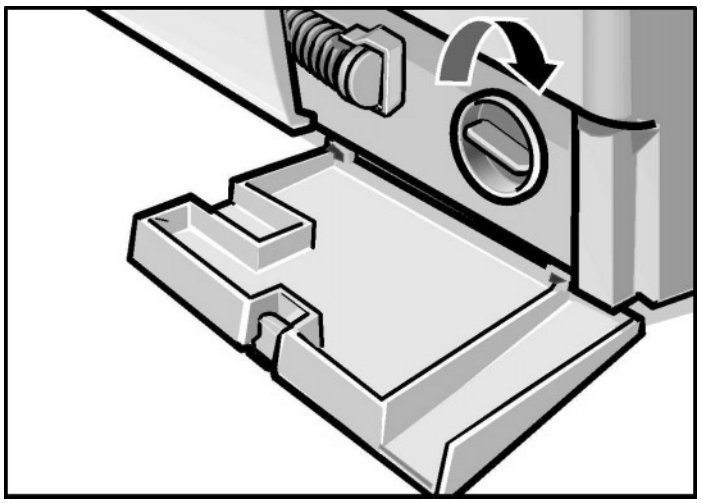

❑ Attach and close the cover plate.

To avoid unused detergent from flowing into the drain during the next wash cycle:

❑ Pour 1 litre / 1 ¾ pt of water into chamber **II**.

❑ Select the **Drain** program.

Cleaning water inlet strainers

This is necessary if very little or no water flows into the washing machine.

First release the water pressure in the supply hoses:

- ❑ Turn off the water taps.
- ❑ Turn the program selector to any program (except **Spin** or **Drain**).
- ❑ Press the **Start** button, and allow the program to run for approx. 40 seconds.
- ❑ Turn the program selector to **Off**.

Cleaning the strainer(s) at the water tap

On both the hot and cold water tap:

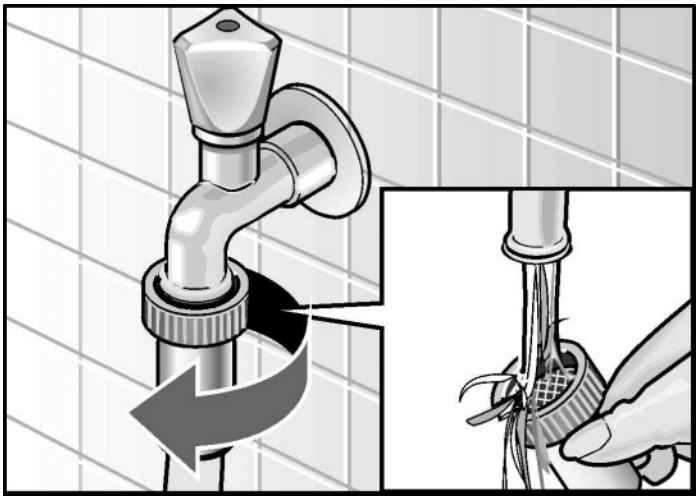

- ❑ Disconnect the hose from the water tap.
- ❑ Rinse the strainer under flowing water.
- ❑ Reconnect the hose.

Cleaning the strainers on the washing machine

On both the hot and cold water tap:

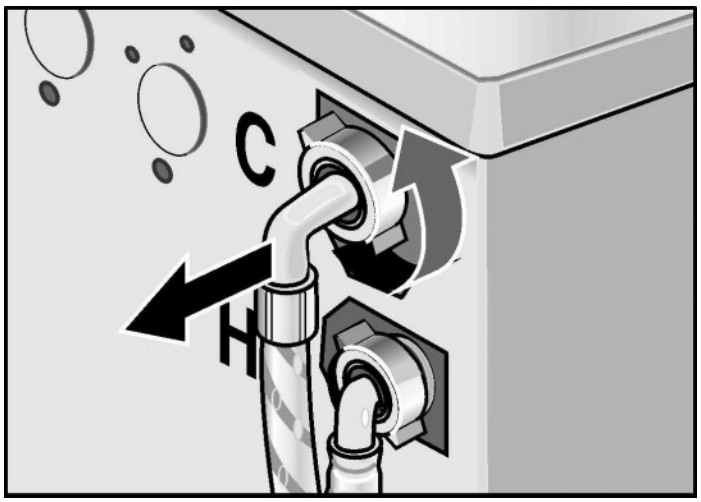

- ❑ Disconnect the hose from the back of the washing machine.

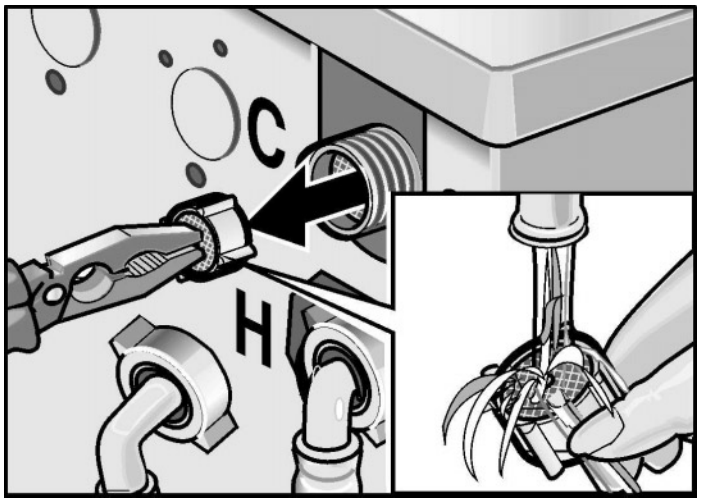

- ❑ Pull out the strainer and rinse under running water.
- ❑ Insert the strainer and reconnect the hose.
- ❑ Turn on the water tap and check whether water is still discharged. If water is still discharged, check that the strainer is attached properly.
- ❑ Turn off the water tap.

Descaling the washing machine

CAUTION

Descaling agents contain acids which can attack parts of the washing machine and discolor the laundry.

Provided that you use the correct amount of detergent, it is not necessary to descale the washing machine.

If, however, descaling the appliance becomes necessary, please follow the instructions provided by the descaling agent manufacturer.

Customer Service

The washing machine requires no special care other than the care and cleaning noted above. If you are having a problem with your washing machine, before calling for service please refer to page 24.

If service becomes necessary, contact your dealer or installer or an authorized service center. Do not attempt to repair the appliance yourself. Any work performed by unauthorized personnel may void the warranty.

If you are having a problem with your washing machine and are not pleased with the service you have recieved:

- ❑ First, please contact your installer or the Authorized Service Contractor in your area and explain to them why you are not satisfied. This will usually correct the problem.
- ❑ If after working with your installer or service persons the problem still has not been resolved to your satisfaction, please let us know by either writing to us at,

  BSH Home Appliances
  5551 Mc Fadden Ave.
  Huntington Beach, LA 92649

or, calling us at,

1–800/944–2904

Please be sure to include, if writing, or have available, if calling, the following information:

- Model Number
- Serial Number
- Date of Original Purchase
- Date Problem Originated
- Explanation of Problem

Also, if writing, please be sure to include a daytime telephone number and a copy of sales invoice.

You will find the model number and serial number information on the rating plate located on the inside of the door above the door glass.

Troubleshooting Minor Faults

⚠ RISK OF ELECTRIC SHOCK! ⚠

Repairs must only be carried out by our Customer Service or an authorized technician.

If repairs are needed, and assuming that you cannot eliminate the fault yourself with the aid of the following table:

- ❑ Turn the program selector to **Off**.
- ❑ Disconnect the washing machine from the mains.
- ❑ Turn off the water tap.
- ❑ Call Customer Service (refer to page 23).

Fault	Cause	Action
The loading door cannot be opened.	**no final spin** was selected.	Select **Drain** or **Spin**.
	Safety function is active.	Wait for 2 minutes.
Detergent residue in the detergent dispenser.	Detergent was damp or lumpy.	Clean and dry the detergent dispenser (refer to page 19).
		Use the dispensing aid for liquid detergents.
Control lights do not come on.	A fuse has triggered.	Call Customer Service replace the fuse.
	Power failure.	An interrupted program will be resumed when power returns. If you wish to unload the laundry, proceed as in “Cleaning the drain pump”, page 20.
	Plug is loose or not inserted.	Insert the plug.
Program does not start. The **ready** control light flashes.	Loading door not closed.	Check whether laundry is trapped in door.
		Close the loading door (a click should be heard).
Program does not start.	**Start** button not pressed.	Press the **Start** button.
Water does not enter the machine or detergent is not washed away.	Water tap not turned on.	Turn on water tap.
	Supply hose kinked or trapped.	Eliminate the cause.
	Strainer in supply hose clogged.	Clean the strainer (refer to page 22).
Water cannot be seen in drum.	This is not a fault. The water lies below the visible part of the drum.	
Water is not completely drained.	Loose debris is blocking the pump.	Clean the pump (refer to page 20).
	Lint-producing laundry was washed. The water drainage pipe or drain hose is blocked.	Clean the water drainage pipe and/or drain hose.
Water is flowing out from underneath the machine.	The thread of the supply hose is not tight.	Tighten the thread.
	Leak in the drain hose.	Replace the drain hose.

Fault	Cause	Action
Foam coming out of the detergent dispenser.	Too much detergent.	Mix 1 tablespoon of fabric softener with ½ litre / 1 pt of water and pour into chamber **I** of the detergent dispenser. Use detergent recommended for high efficiency and front-loading washers.
		Reduce the amount of detergent next time.
The laundry was not spun	Large items of clothing became entangled and could not be distributed evenly in the drum. For safety reasons, the high-speed final spin cycle was automatically cancelled.	Always load large **and** small items together into the drum (see also unbalanced load detection system).
Spin result unsatisfactory.	**Spin** program selected – maximum spin speed 800 r.p.m.	
Repeated spinning at short intervals.	This is not a fault. The imbalance compensation system is attempting to balance the load through repeated spins.	
The program takes longer than usual.	This is not a fault. Unbalanced load detection system attempts to distribute the washing evenly by spinning it several times.	Always load large **and** small items together into the drum.
	The foam detection feature has activated an additional rinsing cycle to reduce the amount of foam.	Add a more appropriate amount of detergent next time.
Unsatisfactory washing result.	The degree of dirt was higher than supposed.	Select a more suitable program.
	Not enough detergent.	Add detergent according to the manufacturer's specifications.
Detergent residue on the laundry.	Some phosphate-free detergents contain water-insoluble residues that may appear as light spots on the laundry.	Brush off spots when laundry is dry.
Grey residues on the laundry.	Dirt accumulation from ointments, fats or oils.	Add the maximum amount of detergent and select the highest permissible temperature next time.

Installation, Connection and Transport

Safety information

⚠ RISK OF INJURY! ⚠

The washing machine is heavy. Take care when lifting it.

CAUTION

Frozen hoses can tear / burst. Do not install the washing machine outdoors or in an area prone to frost.

Be sure to observe all listed warnings and cautions.

These installation instructions are intended for use by qualified installers. In addition to these instructions the washer shall be installed:

- In the United States, in accordance with the National Electric Code, ANSI/NFPA70 ~ latest edition/State and Municipal codes and/or local codes.
- In Canada, in accordance with the Canadian Electric Code C22.1 ~ latest edition/State and Municipal codes and/or local codes.

If the washing machine is located in a room which will be exposed to freezing temperatures, or if it is located in a cabin that is being shut down for the winter, any residual water in the pump or water inlet hose(s) must be drained.

To drain the pump refer to page 20.

To drain the water hose(s) refer to page 22.

Take care not to damage the washing machine. Do not hold onto protruding parts (e.g. loading door) when lifting.

In addition to the safety information listed here, the local water and electricity supplier may have special requirements.

If in any doubt, have the appliance connected by an authorized technician.

Factory-supplied equipment

There is a packet of accessory parts supplied with your washer. Check to make sure that the accessory parts supplied for your model are all there. If any parts are missing, contact your dealer immediately.

Inside the drum:

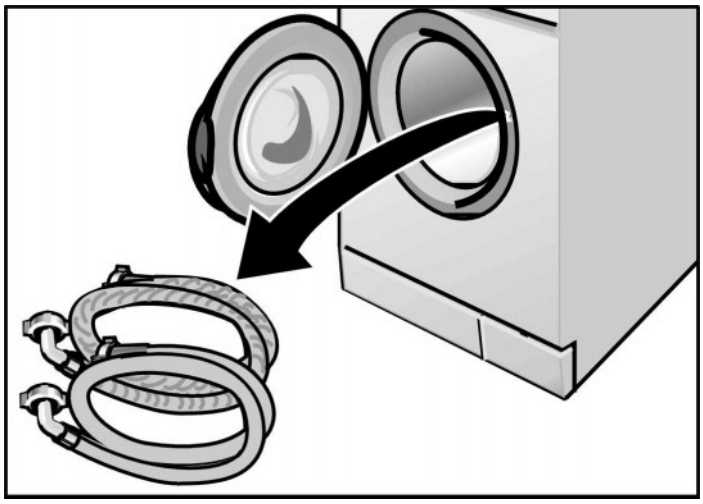

- Water supply hoses (cold and hot water).

Any dampness inside the drum is left over from final testing which every washing machine is subjected to before leaving the factory.

On the rear of the appliance:

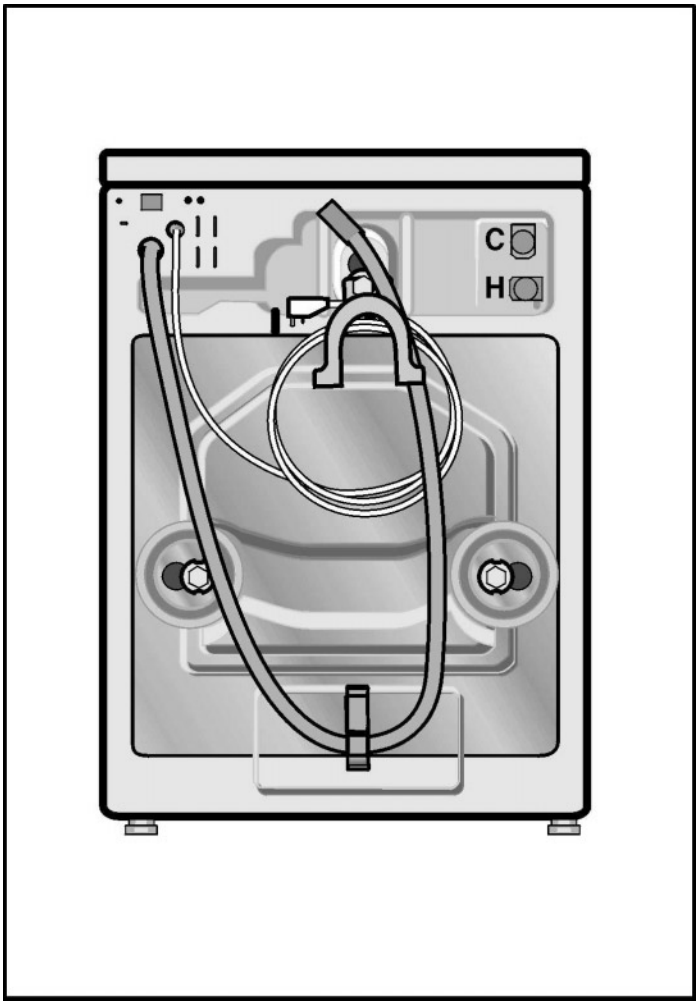

- Water drain hose.
- Mains cable with plug.
- Elbow for attaching the drain hose, e.g. into a wash basin.

C = cold water connection

H = hot water connection

The bag contains:

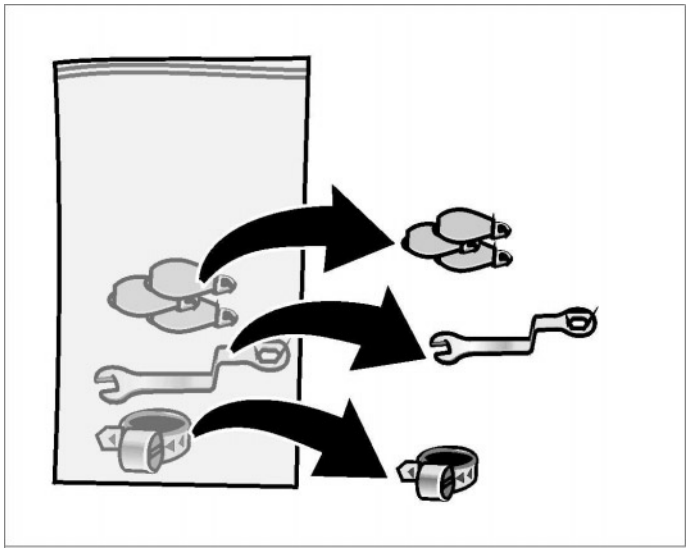

- Covers for placing over the openings after the transport bolts have been removed.
- Wrench
- 1 hose band clip for connection to a siphon.

Depending on the type of connection, the following may also be required:

- Y-piece (can be optained from any specialist store) in the event that cold water connection only is possible.

Useful tools

The following tools are helpful:

- Box cutter.
- Flat crewdriver.
- Ring wrench.
- Spirit level.

Dimensions

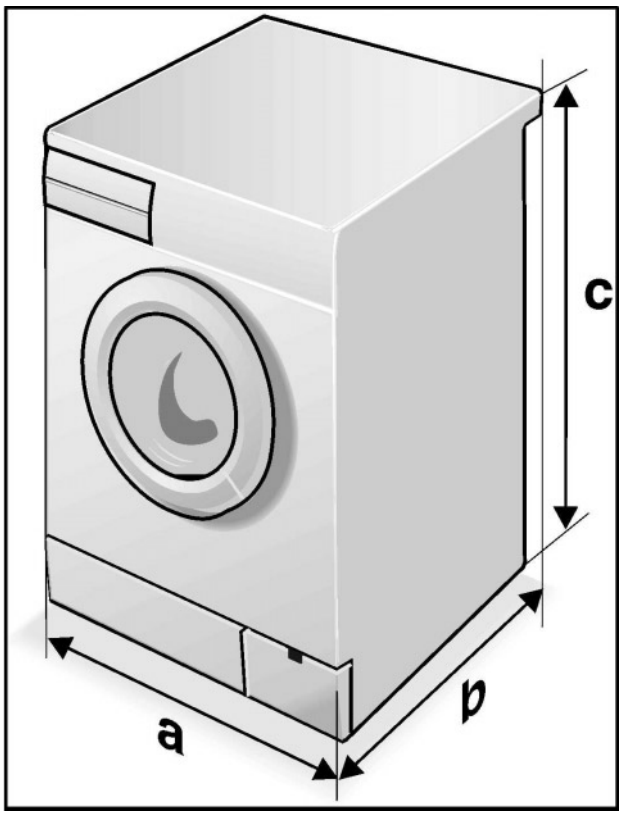

a = 600 mm // 23 $^{5}/_{8}$”

b = 590 mm // 22 $^{1}/_{2}$”

c = 852 mm // 33 $^{1}/_{2}$”

Approx. weight = 69 kg // 152 lbs.

Installation area

WARNING

Never ground the washer to plastic plumbing lines, gas lines or hot water pipes.

Appliance stability is important so that the washing machine does not “walk” during the spin cycles.

The installation area must be solid and even. Soft floor surfaces, such as carpets or surfaces with foam backing, are not suitable.

If the washing machine is to be installed on a wood joist floor:

- ❑ If possible, place the washing machine in a corner of the room.
- ❑ Screw a water-resistant wooden board (at least 30 mm thick) to the floor.
- ❑ Affix the feet of the washing machine using holding brackets *.

If the washing machine is to be placed on a pedestal:

- ❑ Affix the feet of the washing machine using holding brackets *.

  * Holding brackets (set) can be obtained from the Customer Service (order no. WMZ 2200).

WARNING

To reduce the risk of fire this washer mjust be fastened or otherwise secured to an uncovered concrete floor.

Pedestal Mounting
For mounting the washer on the Bosch 12” pedestal (accessory No. WTZ 1210) follow the instructions supplied with the pedestal.

Built-in Installation

The appliance can be built-in; that is, you can install the washing machine under-counter in a kitchen cabinet opening.

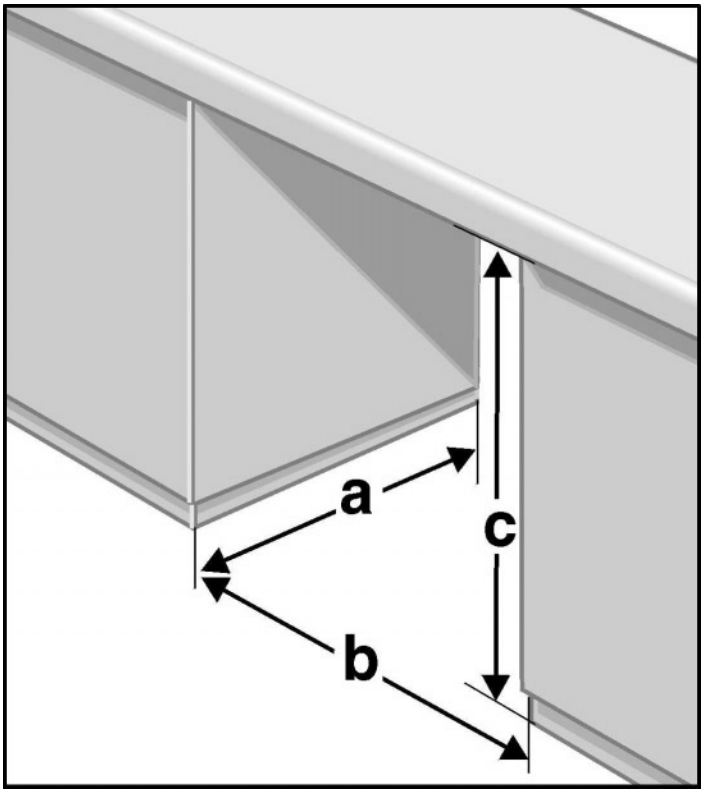

a 590 mm minimum // 23 $^{1}/_{4}$”

b 600 mm minimum // 23 $^{5}/_{8}$”

c 850 mm minimum // 33 $^{1}/_{2}$”

Minimum Installation Clearances

	Alcove/Under Counter	Closet
Sides	0” (0 mm)	0” (0 mm)
Top	0” (0 mm)	0” (0 mm)
Rear	0” (0 mm)	0” (0 mm)
Front	0” (0 mm)	0” (0 mm)

Note: Closet with dryer, please check the openings and ventilation requirement’s for the used dryer.

Levelling procedure

All four appliance feet must be firmly on the ground. The washing machine must not wobble.

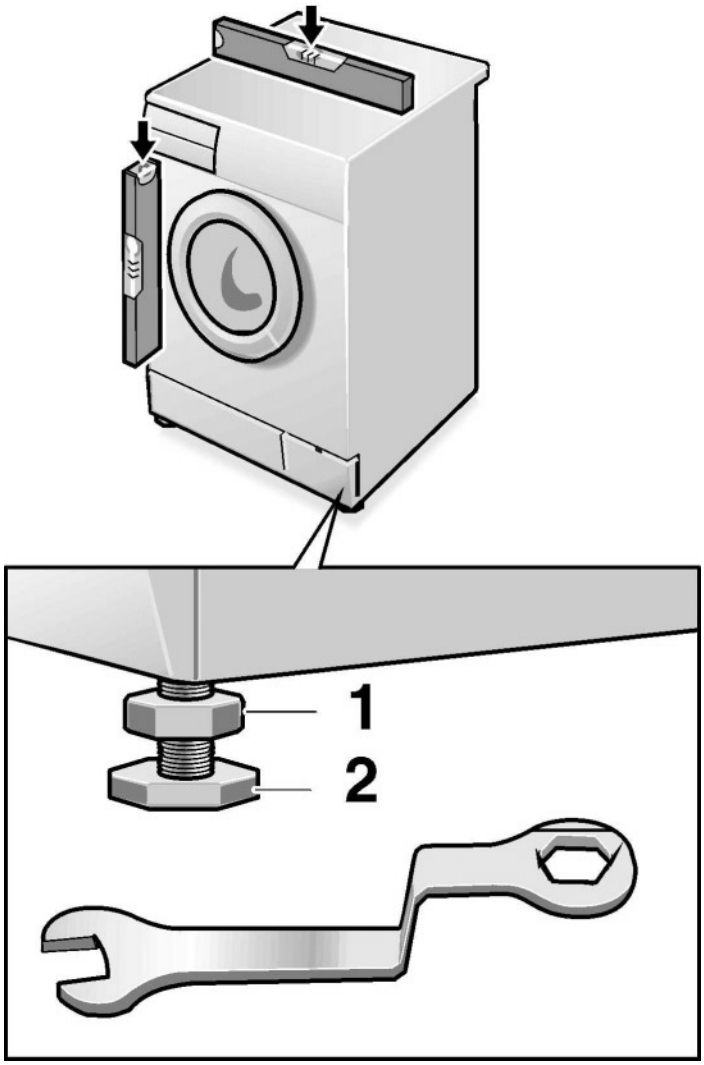

Level the washing machine with the assistance of the four adjustable feet and a spirit level:

- ❑ Loosen the counter-nut **1** using the wrench.
- ❑ Adjust the height by means of turning the appliance foot **2**.
- ❑ Tighten lock nut **1** against the housing.

Removing the transport bolts

CAUTION

The transport bolts must always be removed before using the appliance for the first time and must be retained for any subsequent transport (e.g. when moving).

Preparing

Before removing the transport bolts:

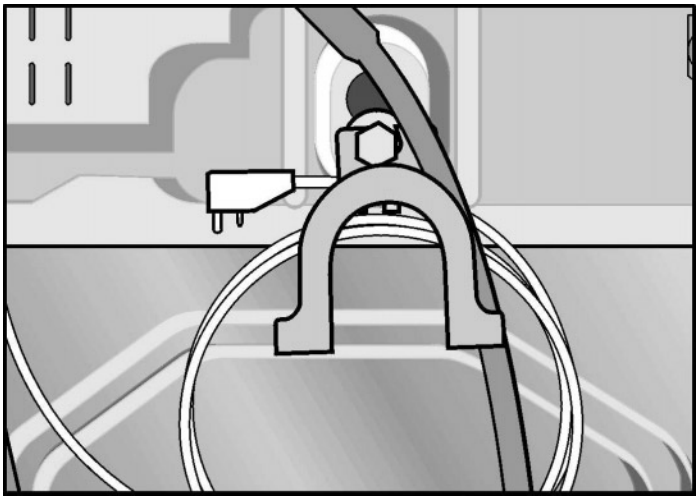

- ❑ Take the hoses out of the holders.
- ❑ Detach the elbow.

Removing

- ❑ Release screws **1**, **2** and **3** using the wrench until they can be moved freely.
- ❑ Completely remove transport bolts **1** and **2** (bolts, washers and bushes).
- ❑ Completely remove transport bolt **3** (bolt, spring, washer and bush) by reaching through the open washing machine door and pulling the drum forwards slightly.

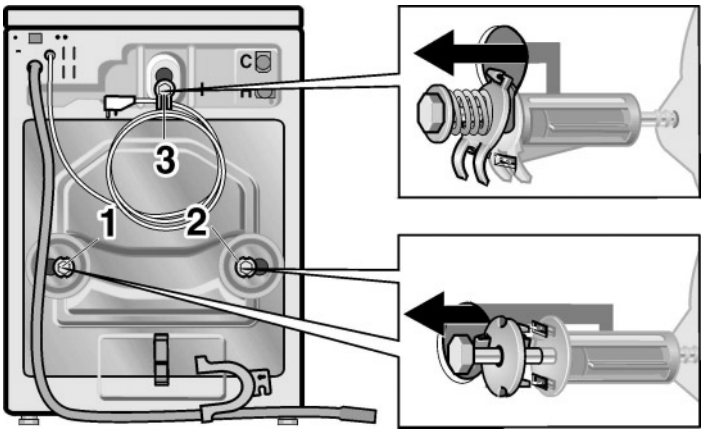

- ❑ Insert the covers.

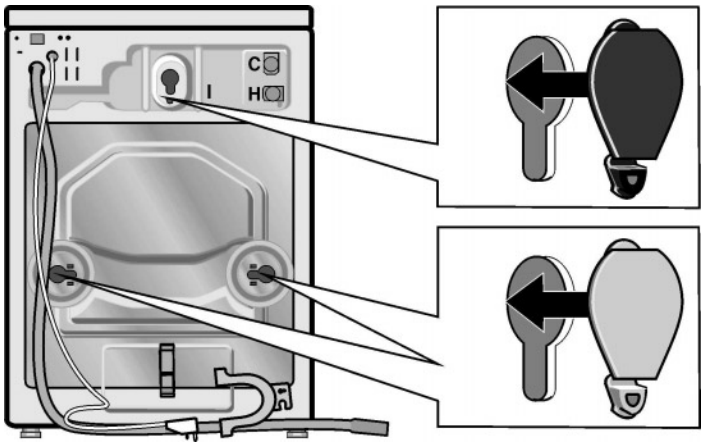

Storing the transport bolts

Always keep the transport bolts for subsequent transportation of the appliance (e.g. when moving house).

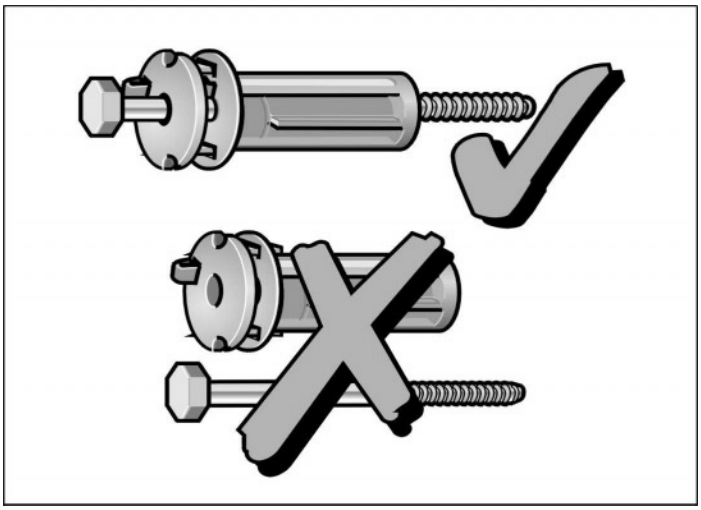

- ❑ Store the transport bolts **1** and **2** with washer and bush attached.

Hose and cable lengths

Left-hand connection

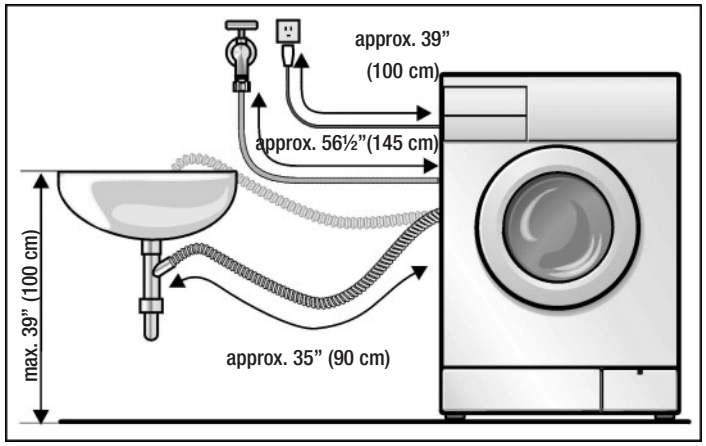

Right-hand connection

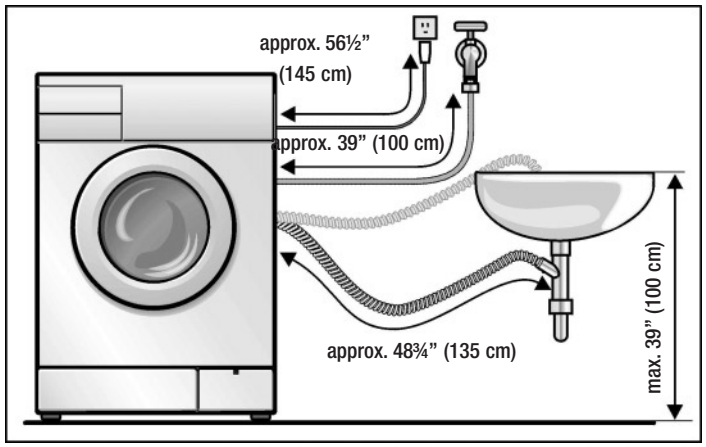

Other hoses

Available from specialty dealers:

– Extended supply hose (approx. 2.2 m // 86.6 in).

Water connection

Water supply

CAUTION

The washing machine must only be operated with cold and hot (max. 140 ˚F // 60 ˚C) tap water. Do not connect the appliance to the mixer tap of an unpressurized hot-water boiler.

If in any doubt, have the water connection carried out by an authorized technician.

The water supply hoses must not be:

– Bent or squashed.

– Modified or cut through (stability can no longer be guaranteed).

Plastic threads must only be tightened by hand. Do not remove the strainers from the water supply hoses.

Observe the water pressure in the supply network:

– The water pressure should be between 14.5 to 145 p.s.i. (1 to 10 bars) (when the tap is turned on, at least 2.2 U. S. gallons (8 liters) of water is discharged per minute).

– A pressure reducing valve must be installed if the maximum water pressure is exceeded.

CAUTION

To protect against water demage, the hot and cold water valves should be accessible when the washer is in place and should **always** be turned off when the washer is not in use.

When washer is being installed in new construction, or a building that has had its plumbing system recently installed or upgraded, the lines must be flushed prior to installing the washer. This must be done to clear the lines of any sand, dirt or residue that may still be in the lines.

Connection options

A Cold water connection and
B Hot water connection (max. 140 °F // 60 °C)

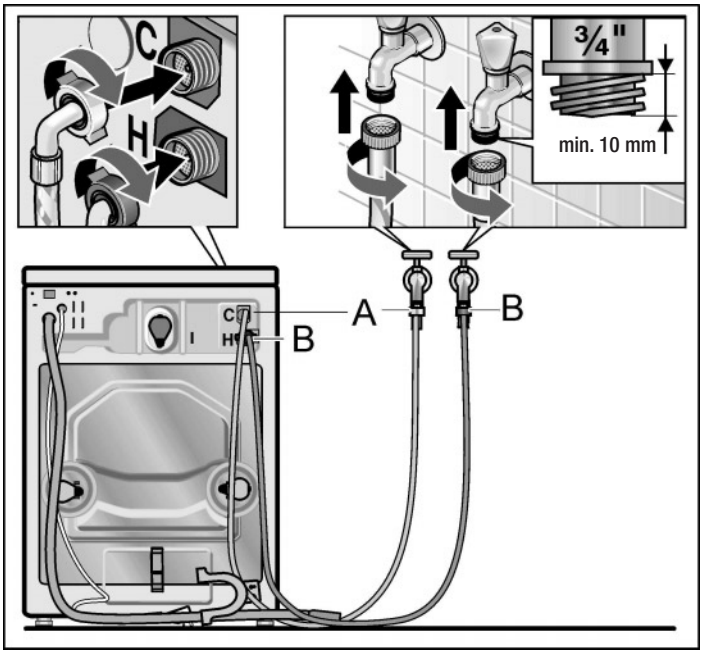

or Cold water connection only with Y-piece

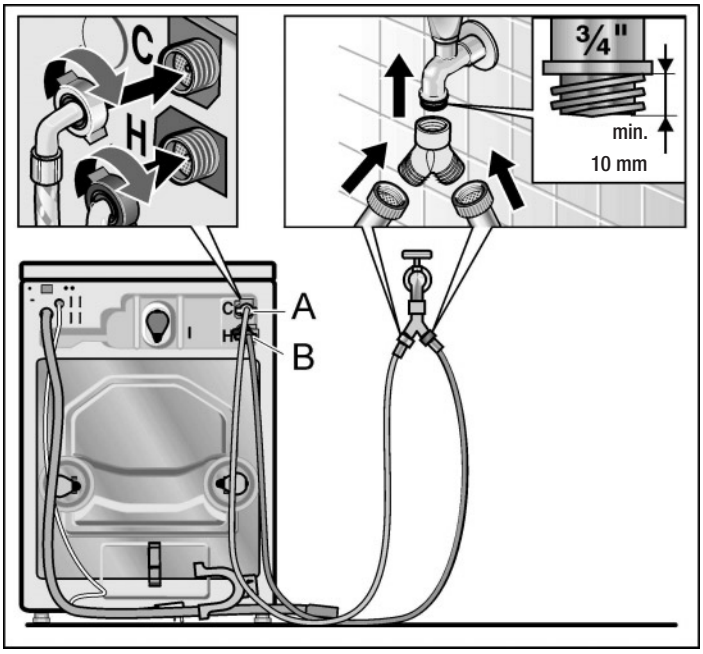

❑ Subsequent to connection:
Turn on the water taps completely, and check connection points for water-tightness.

CAUTION

The connection points are under full water pressure. Check seal with tap fully open.

Water drainage

CAUTION

Do not bend or pull the water drainage hose.

Height difference between the placement area of washer and the drainage point:
Maximum 110 cm // 43 inches.

Standpipe or In Wall Instalation

❑ Use the U-bracket. Attach the U-bracket to the end of the hose and insert end of hose into standpipe or wall drain.

❑ Use a strap or cable tie connected to U-bracket to hold hose in place.

Drainage into a siphon

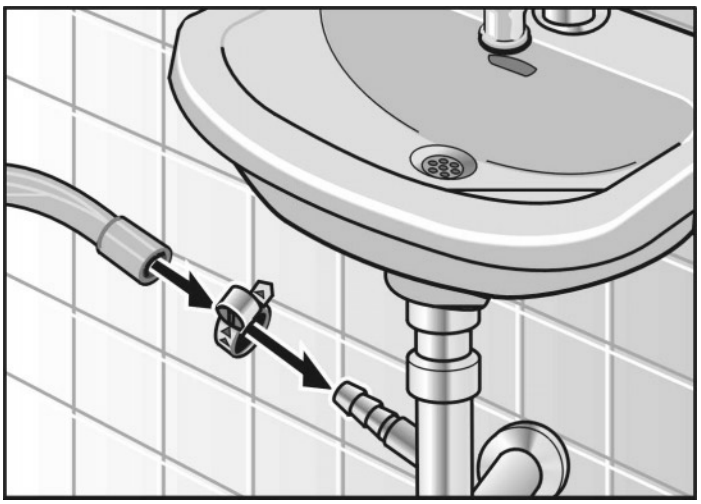

❑ Secure the connection point with a hose band clip.

Drainage into a wash basin

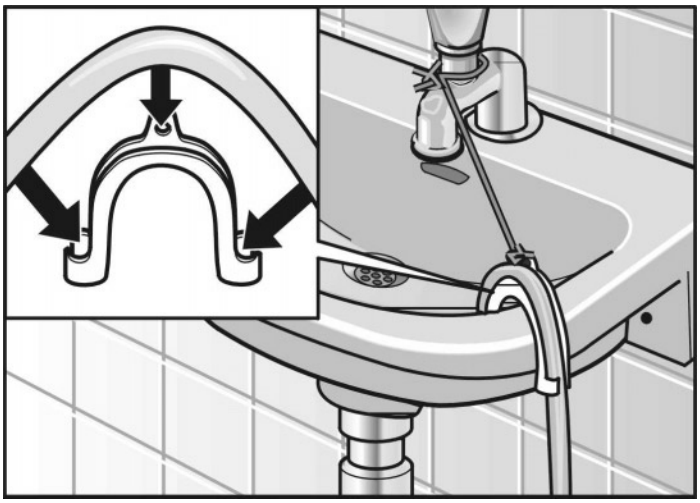

CAUTION

The plug must not block the drain of the wash basin.

- ❑ Secure the water drainage hose so that it does not slide out.
- ❑ When water is being drained, check that the water flow is fast enough.

Electrical connection

GROUNDING INSTRUCTIONS

This appliance must be grounded. In the event of malfunction or breakdown, grounding will reduce the risk of electrical shock by providing a path of least resistance for the electric current. This appliance is equipped with a cord having an equipment-grounding conductor and a grounding plug. The plug must be plugged into an appropriate outlet that is properly installed and grounded in accordance with all local codes and ordinances.

WARNING

Improper connection of the equipment-grounding conductor can result in a risk of electric shock. Check with a qualified electrician or serviceman if you are in doubt as to whether the washing machine is properly grounded.

Do not modify the plug provided with the appliance – if it will not fit in the outlet, have a proper outlet installed by a qualified electrician.

WARNING

The washing machine must only be connected to an individual branch circuit and using a properly installed socket outlet which is grounded.

The mains voltage must correspond to the voltage specification on the washing machine (nameplate). Connection specifications as well as the required fuses are stipulated on the appliance nameplate.

Volts	Hertz	Amperes	Watts
208/240	60	11	2500 (max.)

Make sure that:

- the mains plug fits the socket outlet.
- the cable cross-section is permissible.
- the grounding system is properly installed.

The mains cable may be replaced by an electrician only.
Replacement mains cables are available from Customer Service.

WARNING

To reduce the risk of fire or electrical shock, DO NOT use an extention cord or an adapter to connect the washer to the electrical power supply.

In the event that an earth-leakage circuit breaker is to be used, only use types marked with the following symbol: ⊟.
Only this symbol can guarantee compliance with all current regulations.

Do not insert / remove the mains plug with wet or damp hands.

Handle the plug body only when removing the plug from the socket.

Transport, e.g. when moving

Before transporting the washing machine:

- Turn off the water tap,
- Drain any residual water (refer to page 20),
- Release the water pressure in the supply hose (refer to page 22),
- Disconnect the washing machine from the mains.
- Dismantle the supply and drainage hose,
- Install the lower 2 transport bolts.

Having transported the appliance and ensured proper installation and connection, allow the **Drain** program to run through before starting the first wash program.

Preparing and inserting the transport bolts

❑ Remove the 2 lower covers.

❑ Prepare the transport bolts:
Loosen the screw in the sleeve until the end of the screw is level with the end of the sleeve.

❑ Insert and tighten transport bolts **1** and **2**. The lug on the washing machine must be located in the groove in the rear panel of the housing.

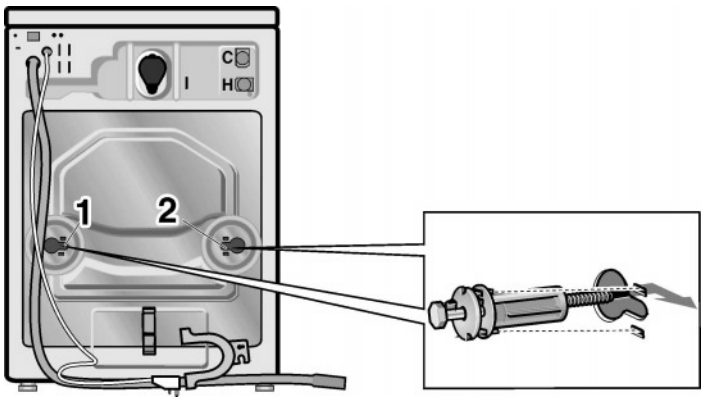

STATEMENT OF WARRANTIES
BOSCH CLOTHES WASHER

The warranties provided by BSH Home Appliances ("Bosch") in this Statement of Warranties apply only to Bosch clothes washers sold to the first using purchaser by Bosch or its authorized dealers, retailers or service centers in the United States or Canada. The Warranties provided herein are not transferable.

LENGTH OF WARRANTY	SCOPE OF WARRANTY
1 Year Full Limited Warranty From Date of Installation*	Bosch will repair or replace, free of charge, any component part that proves defective under conditions of normal home use labor and shipping costs included. Warranty repair service must be performed by an authorized Bosch Service Center (excludes cosmetic parts).
2 Year Limited Warranty From Date of Installation*	Bosch will provide replacement parts, free of charge, for any component part that proves defective under conditions of normal home use, shipping costs included.
5 Year Limited Warranty on Electronics From Date of Installation*	Bosch will repair or replace, free of charge, any microprocessor or printed circuit board that proves defective under conditions of normal home use for a period of five years from the date of original installation, labor charges excluded.
5 Year Limited Warranty on Motor From Date of Installation*	Bosch will repair or replace, free of charge, any motor or component part of the motor that proves defective under conditions of normal home use for a period of five years from the date of original installation, labor charges excluded.
5 Year Limited Warranty on Cabinet Rust From Date of Installation*	Bosch will replace any cabinet part, free of charge, if that cabinet part should rust through under conditions of normal home use, labor charges excluded.
Lifetime Limited Warranty against Stainless Steel Rust Through From Date of Installation*	Bosch will replace your clothes washer, free of charge, with the same model or a current model that is equivalent or better in functionality if the washer drum or outer tub should rust through under conditions of normal home use, labor charges excluded. Warranty is considered void if chlorine liquid bleach has been used.

** Date of installation shall refer to the earlier of the date the clothes washer is installed or ten business days after the delivery date.*

Exclusions.

This warranty does not cover service calls or repairs to correct the installation of the clothes washer, to provide instructions on the use of your clothes washer, to replace house fuses or correct plumbing or the electric wiring in your home or to repair any clothes washer that's use was in a manner other than what is normal and customary for home use. In addition, the warranties provided in this Statement exclude any defects or damage arising from accident, alteration, misuse, abuse, improper installation, unauthorized service work, external forces beyond Bosch's control, such as fire, flood, and other acts of God, or installation not in accordance with local electrical and plumbing codes. Labor charges incurred in the repair or replacement of any clothes washer after a period of one year from date of Installation shall not be covered by this warranty. Any and all replaced and/or repaired parts shall assume the identity of the original for purposes of the applicable warranty period. TO THE EXTENT PERMITTED BY LAW, THIS WARRANTY IS IN LIEU OF ALL OTHER EXPRESS AND IMPLIED WARRANTIES, INCLUDING THE IMPLIED WARRANTIES OF MERCHANTABILITY AND FITNESS FOR A PARTICULAR PURPOSE. Bosch DOES NOT ASSUME ANY RESPONSIBILITY FOR INCIDENTAL OR CONSEQUENTIAL DAMAGES.

TO OBTAIN WARRANTY SERVICE, CONTACT THE NEAREST BOSCH AUTHORIZED SERVICE CENTER OR CALL 1-800-944-2904, OR WRITE AT: BSH HOME APPLIANCES, ATTN. SERVICE, 2800 SOUTH 25TH AVENUE, BROADVIEW, ILLINOIS 60153. BE SURE TO PROVIDE YOUR CLOTHES WASHER'S MODEL, SERIAL NUMBER, PURCHASE DATE AND THE SELLER'S NAME AND ADDRESS.

0901 am
5500 009 571