Type 48SC

Dry-Running Secondary Containment Seal

Chart 7. Criteria for Installation

Shaft/Sleeve	Limits
Surface Finish	.81 µm Ra/32 Ra
Ovality/Out of Roundness (shaft)	.051 mm/.002″ TIR
Axial End Play	.78 mm/.031″ TIR
Out of Squareness/Shaft Runout	.051 mm/.002″ TIR

John Crane International
Engineered Sealing Systems

John Crane Inc.
North America
6400 West Oakton Street
Morton Grove, Illinois 60053 USA

Tel: 708-967-2400
Fax: 708-967-3915

John Crane
Europe, Asia, Africa
Crossbow House
40 Liverpool Road
Slough, England, SL1 4QX

Tel: 44-753-531122
Fax: 44-753-573677

John Crane
Asia Pacific
21 Loyang Crescent
Singapore 1750

Tel: 65-222-9161
Fax: 65-223-5035

John Crane South America
Rua Arizona, 1366
8th Floor, Suites 81/82
Sao Paulo / S.P.
Brazil 04567 - 003

Tel: 55-11-536-9355
Fax: 55-11-536-4446

If the products featured here are for use on dangerous and/or hazardous processes, the Company should be consulted prior to selection and use.
Continuing research results in product improvements; therefore, any specification may be subject to change without notice.

©1994 John Crane International Print 4/94.

Type 48SC

Dry-Running Secondary Containment Seal

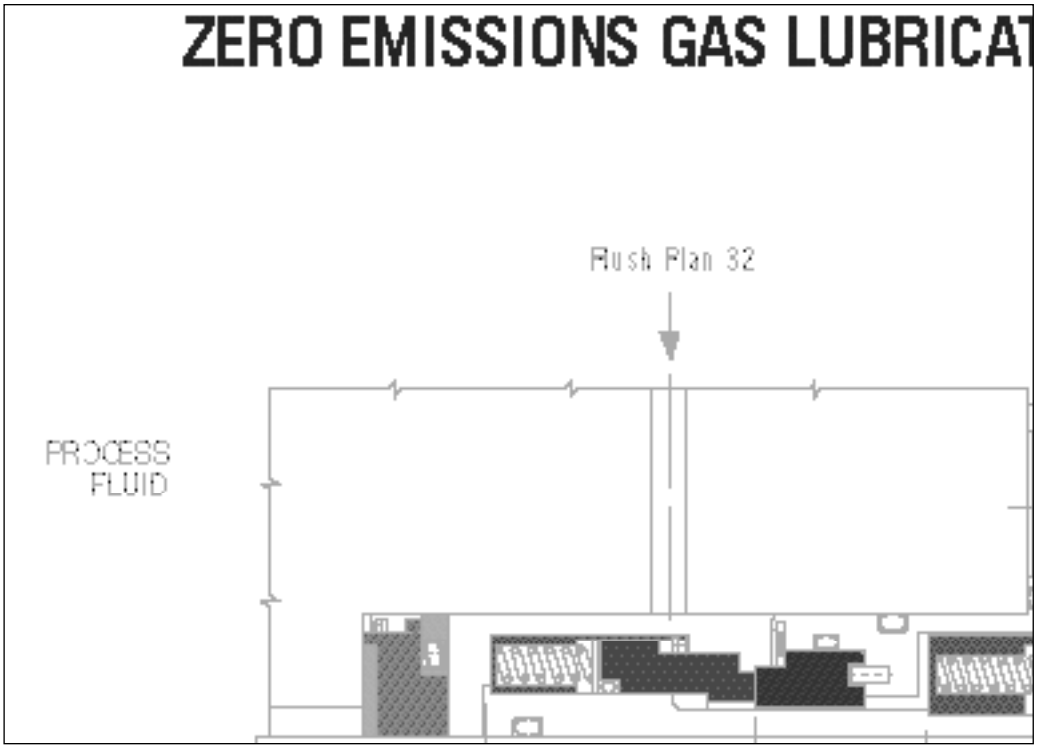

Industries Served
Chemical Processing
Cryogenics
Heat Transfer
Offshore Platforms
Oil and Refinery
Petrochemical Processing
Pharmaceuticals
Pipelines

A – Mating Ring
B – O-Ring
C – Primary Ring
D – O-Ring
E – Retainer
F – Spring
G – Disc
H – Snap Ring
J – Set Screw

Applications

- For easy outboard seal replacement from existing liquid lubricated tandem arrangements to dry sealing.
- For MACT compliant emission control use in conjunction with Type 48.
- For safety and leakage disposal in remote and/or unattended equipment locations.

Self-cooling Type 48SC Seals are full contact dry-running secondary containment seals. This John Crane breakthrough in dry tandem sealing is a face seal, not a typical clearance type bushing. It requires no external lubrication system, reducing hazards from buffer fluid contamination and eliminating contaminated fluid disposal problems. Available in retrofit kits, these secondary containment seals can fit into existing cartridges.

Materials of Construction

Hardware: 316 Stainless Steel
Primary Ring: F_{77} Carbon (no substitute)
Mating Ring: 0_8 Silicon Carbide

Operating Conditions

- **Pressure:**
  Dry: .35 bar g/5 psig continuous
- **Temperatures:**
  -29°C to +205°C/-20°F to +400°F
- **Speeds:**
  Up to 20 m/s/4000 fpm

Design Features/Benefits

Dry-Running Design
Materials contribute to full contact dry-running capabilities of Type 48SC Seals. The primary ring is a John Crane proprietary carbon grade developed specifically for dry-running systems. The mating ring is highly thermal conductive silicon carbide.

Optimized Spring Load
Primary ring has lightly-loaded springs to permit dry sealing at pump speeds. This capability is made possible by close control of component tolerance stackup and springs with low spring rate to keep even load over a wider working height range. Controlled O-ring squeeze and spring load minimizes seal head drag.

Optimized Thermal Dissipation
Self-cooling performance is enhanced by tapered back surface of mating ring, allowing greater access of air at seal faces and increasing surface area exposed to cooling air which is created by specially designed drive collar. Also contributing to low heat at faces are narrow face width, and highly controlled pressure and thermal distortion.

Positive Leakage Control
With Type 48SC Secondary Containment Seals, leakage from primary seal is captured and sent to the flare or vapor recovery system in emission sensitive applications, or sent to a drain for collection in specific applications where emission control is not critical.

Type 48SC

Dry-Running Secondary Containment Seal

Typical Arrangement/Dimensional Data
Type 48SC with Type 48HP Arrangement

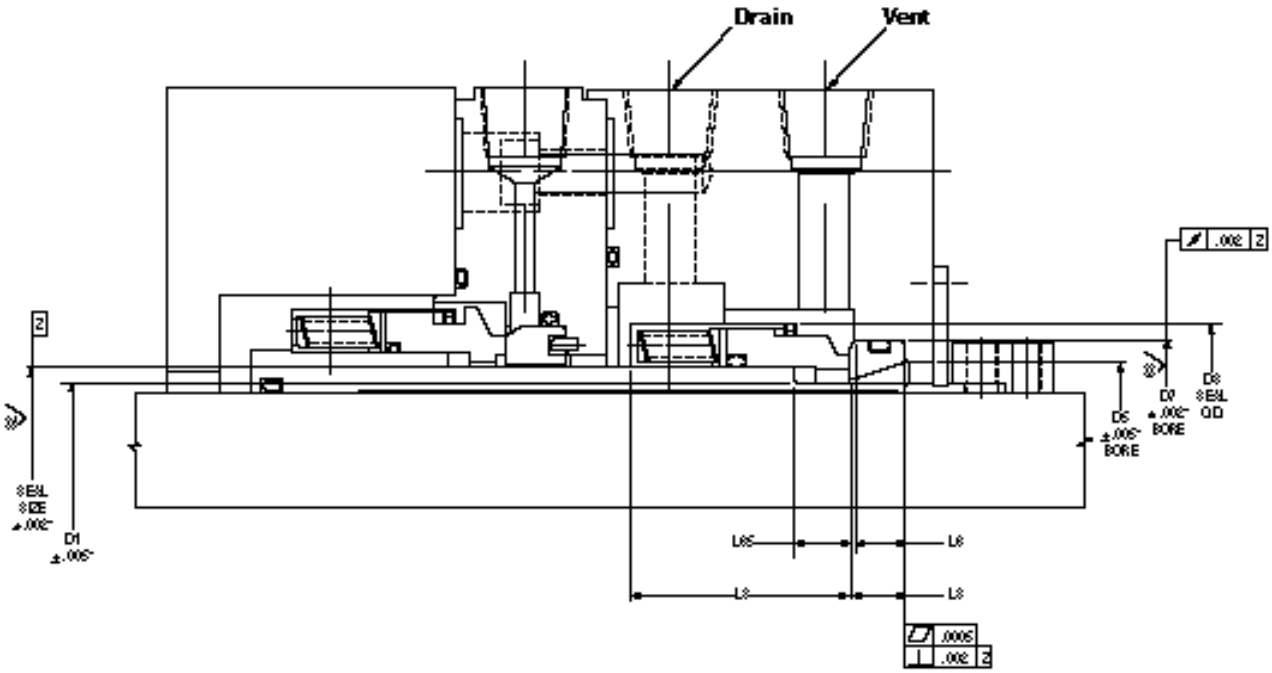

Chart 1. Type 48SC Dimensional Data (Inches)

Seal Size	D1	D3	D5	D7	L3	L6	L8	L65
1.000	0.750	1.562	1.062	1.375	1.312	0.343	0.406	0.343
1.125	0.875	1.687	1.187	1.500	1.375	0.343	0.406	0.343
1.250	1.000	1.875	1.312	1.625	1.375	0.375	0.437	0.343
1.375	1.125	2.000	1.468	1.750	1.437	0.375	0.437	0.343
1.500	1.250	2.125	1.593	1.875	1.437	0.375	0.437	0.343
1.625	1.375	2.375	1.703	2.000	1.750	0.375	0.437	0.437
1.750	1.500	2.500	1.812	2.125	1.750	0.375	0.437	0.437
1.875	1.625	2.625	1.968	2.375	1.750	0.437	0.500	0.437
2.000	1.750	2.750	2.093	2.500	1.750	0.437	0.500	0.437
2.125	1.875	3.000	2.218	2.625	2.062	0.437	0.500	0.500
2.250	2.000	3.125	2.343	2.750	2.062	0.437	0.500	0.500
2.375	2.125	3.250	2.500	3.000	2.062	0.500	0.562	0.500
2.500	2.250	3.375	2.625	3.125	2.062	0.500	0.562	0.500
2.625	2.375	3.500	2.750	3.250	2.062	0.500	0.562	0.500
2.750	2.500	3.625	2.890	3.375	2.062	0.500	0.562	0.500
2.875	2.625	3.750	3.046	3.625	2.062	0.562	0.625	0.500
3.000	2.750	3.812	3.171	3.500	2.062	0.562	0.625	0.500
3.125	2.875	3.937	3.296	3.750	2.062	0.562	0.625	0.562
3.250	3.000	4.125	3.437	3.875	2.062	0.562	0.625	0.562
3.375	3.125	4.250	3.546	4.000	2.062	0.656	0.781	0.562
3.500	3.250	4.375	3.671	4.125	2.062	0.656	0.781	0.562
3.625	3.375	4.500	3.796	4.250	2.062	0.656	0.781	0.562
3.750	3.500	4.625	3.921	4.375	2.062	0.656	0.781	0.562
3.875	3.625	4.750	4.046	4.500	2.062	0.656	0.781	0.562
4.000	3.750	4.875	4.171	4.625	2.062	0.656	0.781	0.562
4.125	3.875	5.125	4.296	4.750	2.062	0.656	0.781	0.562
4.250	4.000	5.250	4.421	4.875	2.062	0.656	0.781	0.562

Type 48SC

Dry-Running Secondary Containment Seal

Piping Schematics

Typical Vent to Flare or Vapor Recovery System

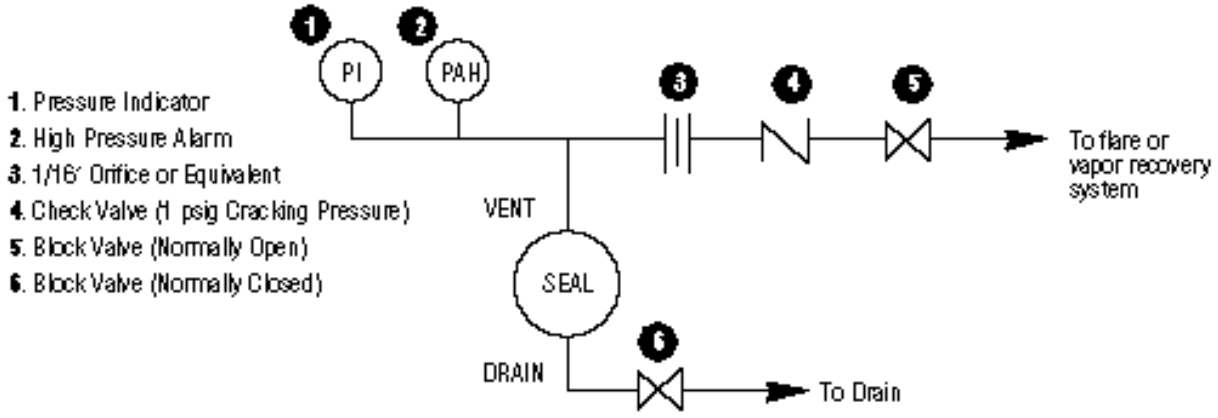
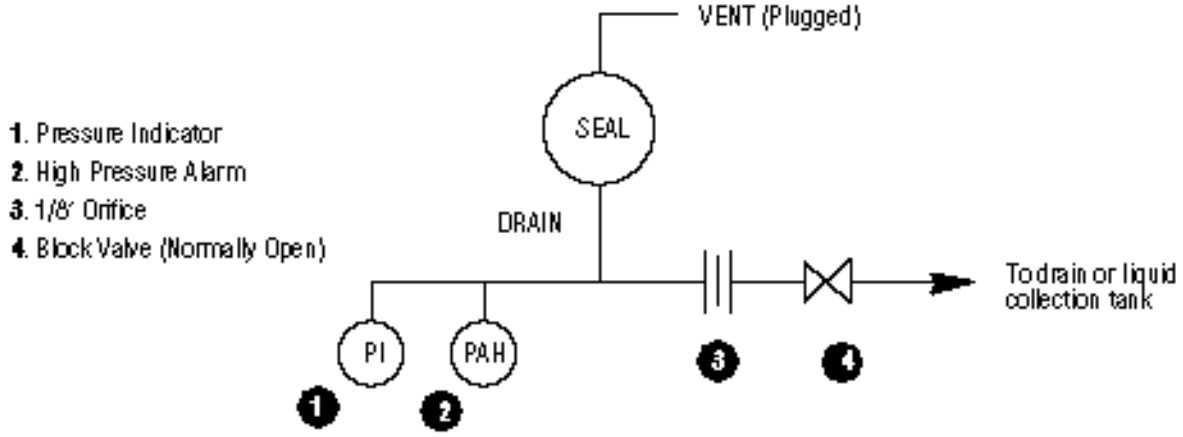
Typical Vent to Drain or Liquid Collection Tank