TYPE 93FR

Floating Ring Separation Seal

A – Housing
B – Retainer
C – Clamp Plate
D – Garter Spring
E – Anti-rotation Pin
F – Bushing Segment
G – Sleeve

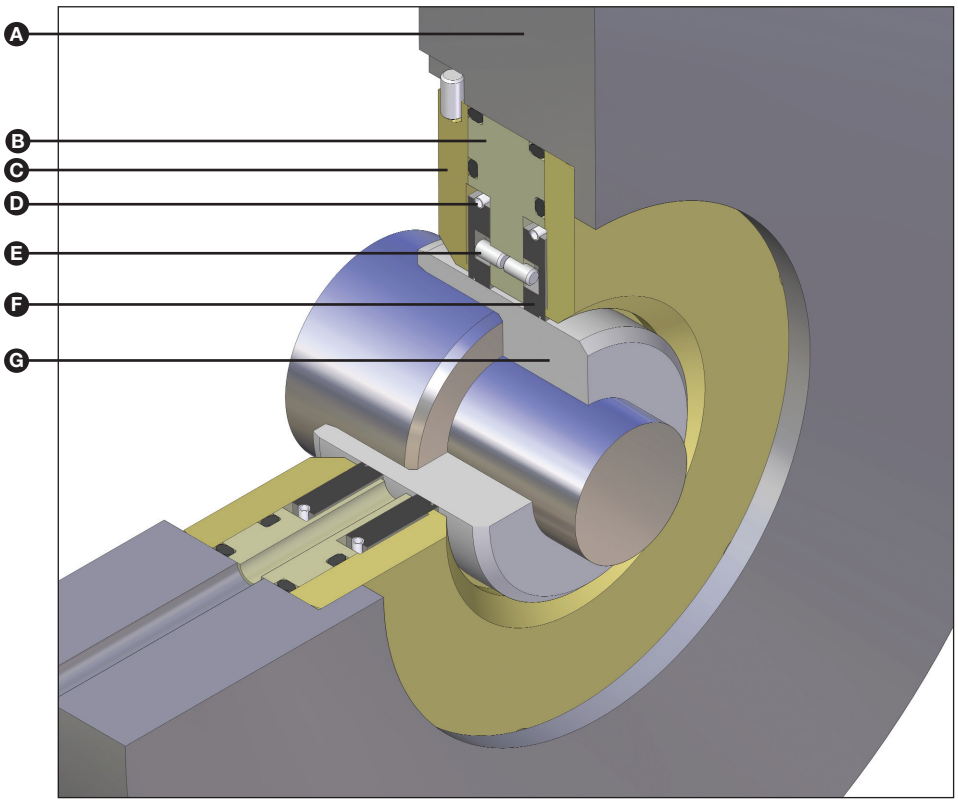

Product Description

The Type 93FR is a non-contacting carbon bushing designed to protect dry gas seals from bearing oil ingress

- Segments are specifically designed to prevent oil migration
- Separation gas (normally nitrogen or air) is injected between the two segmented bushings effectively creating a pressure barrier between the bearing and dry gas seal cavity
- Advanced materials and design eliminate wear under normal running, promoting long service life

Design Features

- Non-contacting for longer life and improved reliability; low heat generation
- Runs at low operating pressure differential enabling low gas consumption
- Specially designed segments further minimise gas consumption
- Universal design, independent of shaft rotation
- Will retrofit many traditional carbon bushing rings
- Suitable for running with nitrogen separation gas irrespective of dew point
- Self-centring design minimises wear even during upset conditions

Performance Capabilities

- Size range:
  40 to 210 mm with sleeve to fit all metric or imperial shaft sizes
- Operating temperature:
  -40°C to 230 °C, -40°F to 450 °F
- Speed:
  Up to 130 mps/ 430fps
- Maximum separation gas operating differential pressure:
  0.5 bar/ 7.5 psi
- Recommended separation gas operating differential pressure;
  0.05 to 0.1 bar/ 0.75 to 1.5 psi
- Separation Gases:
  Nitrogen, Air
- Vibration Levels to API617

For alternative conditions, consult John Crane Engineering.

TYPE 93FR

Floating Ring Separation Seal

Required Installation and P&ID for Type 93FR Separation Seal

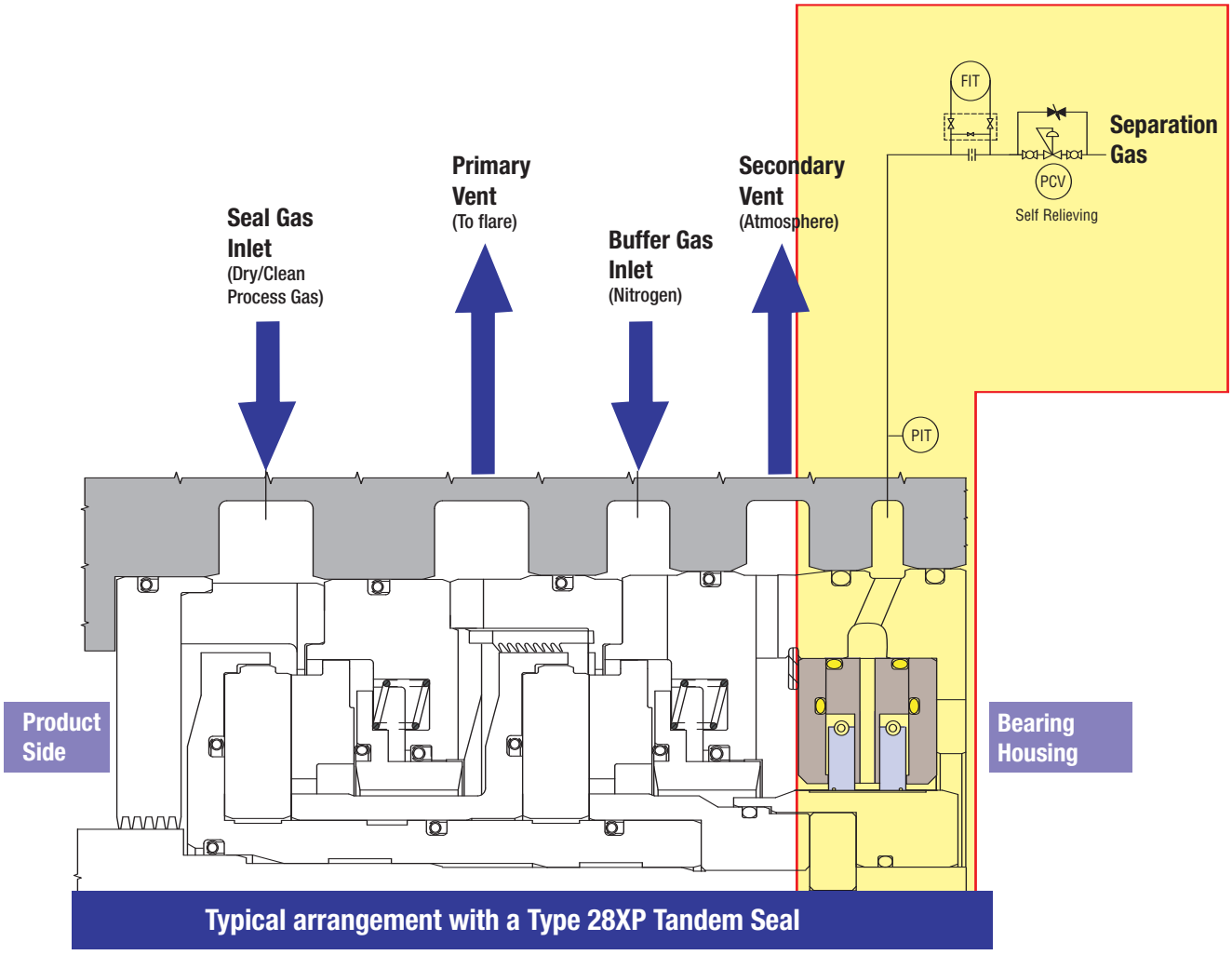

Typical arrangement with a Type 28XP Tandem Seal

Separation gas can be pressure controlled (recommended, to minimise gas consumption) or flow controlled. Typical example shown, variations may be necessary depending on individual circumstances including availability and quality of separation gas and safety considerations.

TYPE 93FR

Floating Ring Separation Seal

Type 93FR Consumption Rates

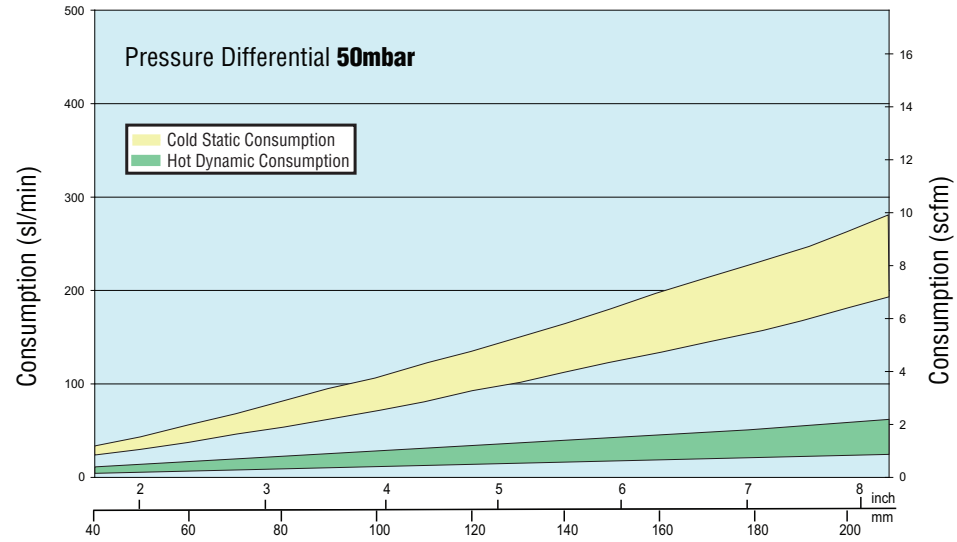

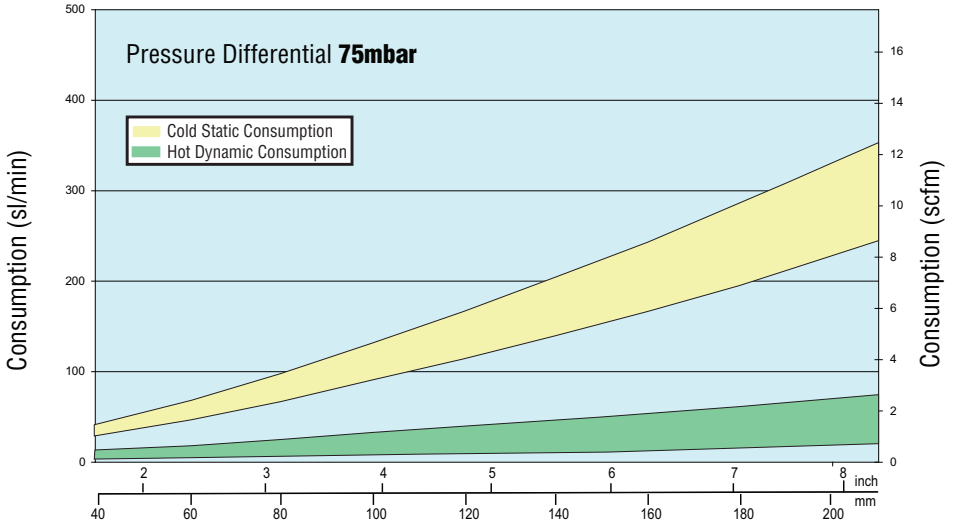

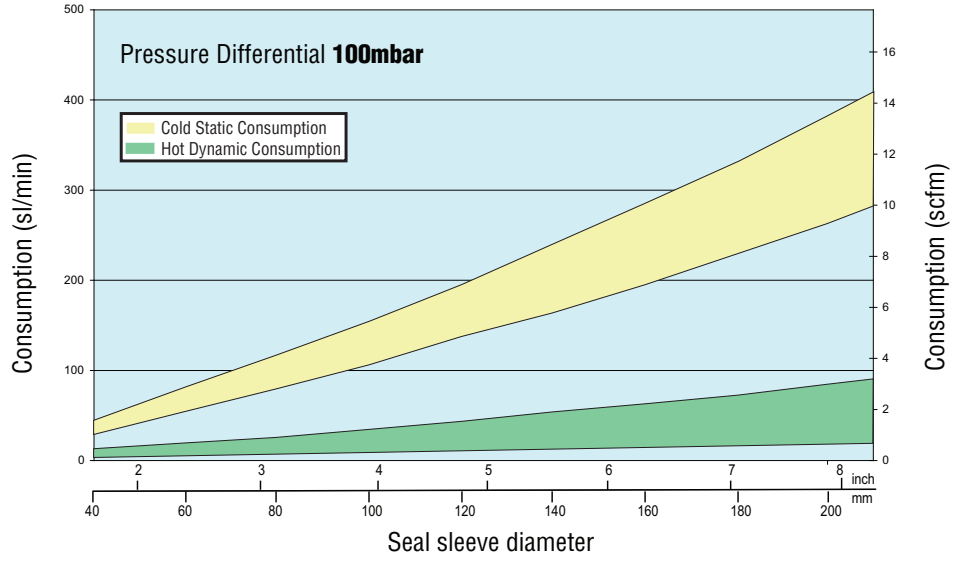

Shaded areas indicate expected consumption ranges for typical application conditions. Actual consumption is dependent on application speed, temperature and individual installation.

TYPE 93FR

Floating Ring Separation Seal

Materials of Construction

SEAL COMPONENT DESCRIPTION	STANDARD MATERIALS
Bushing segments	Carbon
Garter spring	Stainless steel
Housing assembly Clamp plate assembly	410 Stainless steel
O rings	Fluoroelastomer

Alternative materials are available, consult John Crane Engineering.

Performance Recommendations

- Separation Gas Specification:
  Filtration: 10 microns and dry
  Proper consideration must be given as to the possibility of explosive mixtures.
- Operating Environment:
  Vibration levels within API617
  Bearing housing should be well drained
  Bearing housing should not be pressurized
  Consideration should be given to the secondary vent piping as not to cause an excessive back pressure
  Oil exiting the bearing cavity directed at the separation seal should be noted at design.

Alternative Applications

The Type 93FR is normally supplied as a double separation seal as depicted in this data sheet however individual carbon rings can be supplied for use on other applications where an effective barrier is required i.e. bearing chambers, fans, blowers, gearboxes and other high speed low pressure applications - please consult John Crane Engineering.

For your nearest John Crane facility, please contact one of the locations below.

Europe
Slough, UK
Tel: +44-1753-224000
Fax: +44-1753-224224

North America
Morton Grove
Tel: +1-847-967-2400
Fax: +1-847-967-3915

Latin America
São Paulo, Brazil
Tel: +55-11-3371-2500
Fax: +55-11-3371-2599

Middle East & Africa
Dubai, United Arab Emirates
Tel: +971-481-27500
Fax: +971-488-62690

Asia Pacific
Singapore
Tel: +65-6512-5200
Fax: +65-6512-5233

Mixed Sources
Product group from well-managed forests and other controlled sources
www.fsc.org Cert no.
© 1996 Forest Stewardship Council

If the products featured will be used in a potentially dangerous and/or hazardous process, your John Crane representative should be consulted prior to their selection and use. In the interest of continuous development, John Crane Companies reserve the right to alter designs and specifications without prior notice. ISO 9001, ISO 14001, Certified. Details available on request.

smiths
bringing technology to life

©2008 John Crane Print 05/08 www.johncrane.com