TYPE 3740

Wet Running Cartridge Split Seal

A – Mating Ring
B – Mating Ring Adapter Assy.
C – Sealing Element Gasket
D – Sealing Element Strip
E – Sealing Element O-Ring
F – Set Screw
G – Primary Ring
H – Retaining Ring
I – Spring Adapter Assy. Set
J – O-Ring (Split)
K – Gland Plate Assy.
L – Gland Plate Gasket
M – Captive Socket Head Cap Crews

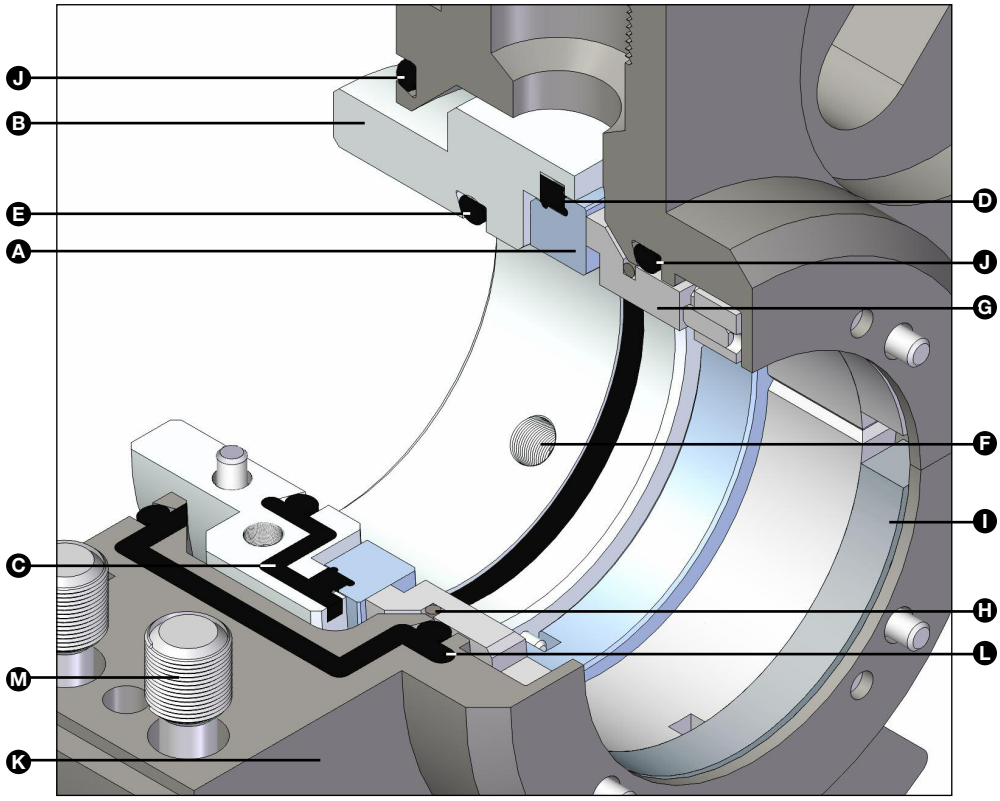

Product Description

The Type 3740 is a family of split seals using the latest modular split seal technology from John Crane that also combines the unique design requirements for wet-running and dry-running services onto one common seal platform.

- The Type 3740 wet-running split seal incorporates the best features for fast and easy seal installation, while providing reliable seal performance in demanding pump and other rotating equipment fluid services.
- The Type 3740D dry-running split seal is designed for the large shaft run-out and harsh operating conditions commonly associated with top-entry vessel mixing services and other dry-running applications.

Typical Applications

- Agitators / Mixers
- Centrifugal Pumps
- Positive Displacement Pumps
- Split Case Pumps
- Chemicals
- Light Slurries
- Marine
- Paper Stock
- Water / Wastewater

Performance Capabilities

- Temperatures: Up to 121°C / 250°F
- Pressures: Up to 31.0 bar g / 450 psig excursion
  20.7 bar g / 300 psig continuously
- Speeds: Up to 17.8 m/s / 3500 fpm
- Runout: Up to 1.52mm / 0.060" TIR

Design Features

- Factory-preassembled rotor assembly for fast, easy yet precise rotating face installation.
- Separate stationary seal face for visual assurance the halves are correctly aligned.
- Factory-preassembled gland plate assembly for easy, single-step installation.
- Balanced primary ring design for increased pressure capability.
- Premium seal face materials for optimal performance.
- Captive socket head cap screws to eliminate lost or dropped screws.
- Same-side screws on all hardware for easy access and faster installation.
- Dovetail O-ring grooves to contain all O-rings without requiring adhesives.
- Fast and easy field repair kits that do not require any special tools, adhesives or procedures.
- Two connections in the gland to provide easy access for flush piping.

TYPE 3740

Wet Running Cartridge Split Seal

Type 3740 Typical Arrangement/Dimensional Data

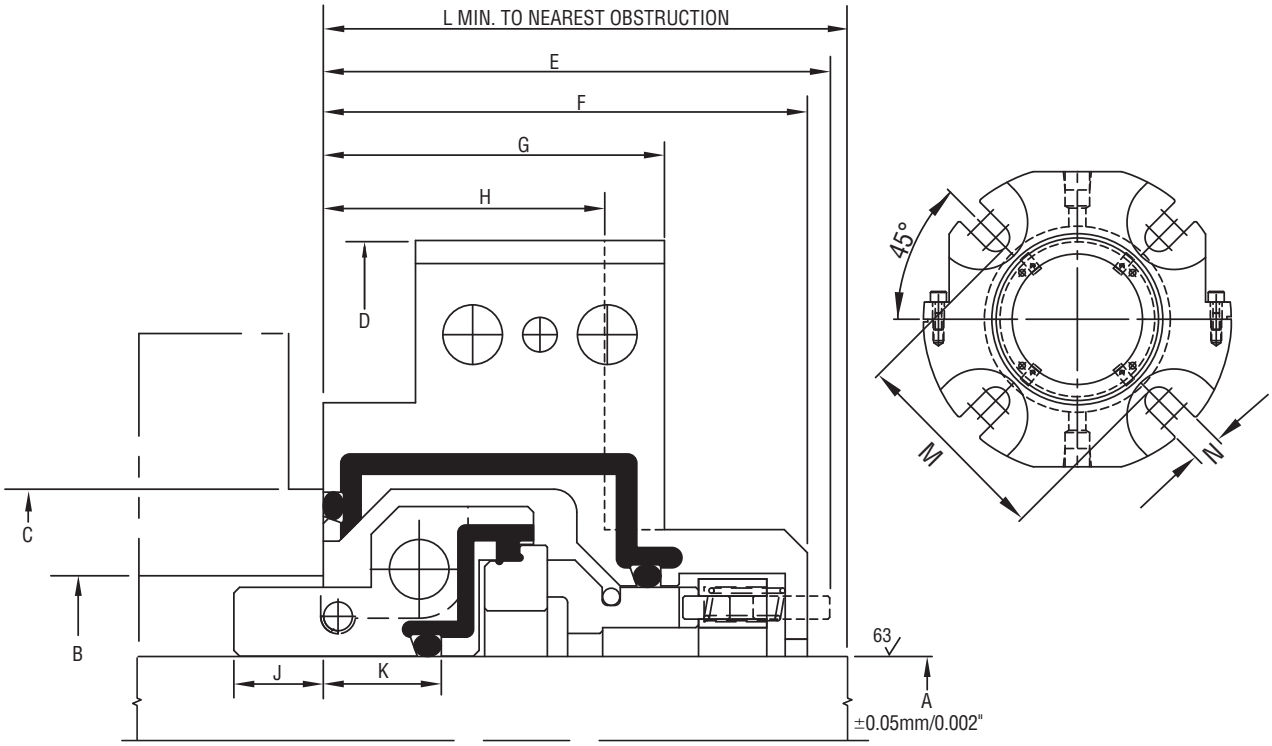

Type 3740 Dimensional Data (inches)

SEAL SIZE	SIZE CODE	A	B MIN.	B MAX.	C MIN.	D	E	F	G	H	J	K	L MIN.	M	N
1.375	0349	1.375	2.000	2.375	2.625	5.250	2.070	1.980	1.500	1.250	0.375	0.475	2.130	2.813	0.562
1.500	0381	1.500	2.125	2.500	2.750	5.250	2.070	1.980	1.500	1.250	0.375	0.475	2.130	3.063	0.562
1.625	0412	1.625	2.250	2.625	2.875	5.500	2.070	1.980	1.500	1.250	0.375	0.475	2.130	3.188	0.562
1.750	0444	1.750	2.375	2.750	3.000	5.500	2.070	1.980	1.500	1.250	0.375	0.475	2.130	3.313	0.562
1.875	0476	1.875	2.500	2.875	3.125	5.500	2.070	1.980	1.500	1.250	0.375	0.475	2.130	3.313	0.562
2.000	0508	2.000	2.625	3.000	3.250	5.750	2.070	1.980	1.500	1.250	0.375	0.475	2.130	3.563	0.562
2.125	0539	2.125	2.750	3.125	3.375	6.250	2.070	1.980	1.500	1.250	0.375	0.475	2.130	3.937	0.688
2.250	0571	2.250	3.000	3.375	3.625	6.250	2.070	1.980	1.500	1.250	0.375	0.475	2.130	3.937	0.688
2.375	0603	2.375	3.000	3.500	3.750	6.250	2.070	1.980	1.500	1.250	0.375	0.475	2.130	3.937	0.688
2.500	0635	2.500	3.250	3.750	4.000	6.750	2.290	2.185	1.625	1.375	0.365	0.545	2.350	4.250	0.688
2.625	0666	2.625	3.500	3.905	4.155	7.000	2.290	2.185	1.625	1.375	0.365	0.545	2.350	4.500	0.688
2.750	0698	2.750	3.500	3.905	4.155	7.000	2.290	2.185	1.625	1.375	0.365	0.545	2.350	4.500	0.688
2.875	0730	2.875	3.750	4.188	4.438	7.500	2.290	2.185	1.625	1.375	0.365	0.545	2.350	4.750	0.688
3.000	0762	3.000	3.750	4.375	4.625	7.500	2.290	2.185	1.625	1.375	0.365	0.545	2.350	4.750	0.688
3.125	0793	3.125	3.875	4.313	4.563	7.750	2.290	2.185	1.625	1.375	0.365	0.545	2.350	4.875	0.688
3.250	0825	3.250	4.000	4.500	4.750	7.750	2.290	2.185	1.625	1.375	0.365	0.545	2.350	5.000	0.688
3.375	0857	3.375	4.250	4.750	5.000	8.000	2.290	2.185	1.625	1.375	0.365	0.545	2.350	5.250	0.812
3.500	0889	3.500	4.250	4.750	5.000	8.000	2.290	2.185	1.625	1.375	0.365	0.545	2.350	5.250	0.812
3.625	0920	3.625	4.500	5.188	5.438	9.000	2.750	2.625	1.850	1.530	0.485	0.640	2.840	5.938	0.812
3.750	0952	3.750	4.500	5.188	5.438	9.000	2.750	2.625	1.850	1.530	0.485	0.640	2.840	5.938	0.812
3.875	0984	3.875	4.750	5.438	5.688	9.000	2.750	2.625	1.850	1.530	0.485	0.640	2.840	5.938	0.812
4.000	1016	4.000	4.750	5.438	5.688	9.000	2.750	2.625	1.850	1.530	0.485	0.640	2.840	5.938	0.812
4.125	1047	4.125	5.000	5.688	5.938	9.500	2.750	2.625	1.850	1.530	0.485	0.640	2.840	6.438	0.812
4.250	1079	4.250	5.000	5.688	5.938	9.500	2.750	2.625	1.850	1.530	0.485	0.640	2.840	6.438	0.812
4.375	1111	4.375	5.250	5.938	6.188	9.500	2.750	2.625	1.850	1.530	0.485	0.640	2.840	6.438	0.812
4.500	1143	4.500	5.250	5.938	6.188	9.500	2.750	2.625	1.850	1.530	0.485	0.640	2.840	6.438	0.812
4.750	1206	4.750	5.500	6.188	6.438	10.000	2.750	2.625	1.850	1.530	0.485	0.640	2.840	6.938	0.812
5.000	1270	5.000	5.750	6.438	6.688	10.000	2.750	2.625	1.850	1.530	0.485	0.640	2.840	6.938	0.812
5.125	1301	5.125	6.000	6.813	7.063	11.500	2.750	2.625	1.850	1.530	0.485	0.640	2.840	8.062	0.938
5.250	1333	5.250	6.000	6.813	7.063	11.500	2.750	2.625	1.850	1.530	0.485	0.640	2.840	8.062	0.938
5.375	1365	5.375	6.250	6.938	7.188	11.500	2.750	2.625	1.850	1.530	0.485	0.640	2.840	8.062	0.938
5.500	1397	5.500	6.250	6.938	7.188	11.500	2.750	2.625	1.850	1.530	0.485	0.640	2.840	8.062	0.938
5.750	1460	5.750	6.500	7.188	7.438	11.500	2.750	2.625	1.850	1.530	0.485	0.640	2.840	8.062	0.938
5.875	1492	5.875	6.750	7.438	7.688	11.500	2.750	2.625	1.850	1.530	0.485	0.640	2.840	8.062	0.938
6.000	1524	6.000	6.750	7.438	7.688	11.500	2.750	2.625	1.850	1.530	0.485	0.640	2.840	8.062	0.938

TYPE 3740

Wet Running Cartridge Split Seal

Modular Split Seal Technology

The Type 3740 Cartridge Split Seal is the latest in split seal design technology that makes installation as fast and as easy as possible, yet ensures the important step of proper seal face halves alignment is done correctly for optimal performance. The Type 3740 seal is comprised of pre-assembled modules that combine multiple individual parts into three components:

- Rotor assembly – rotating mating ring seal face and hardware
- Primary ring assembly – stationary primary ring seal face and retaining ring clip
- Gland plate assembly – all stationary hardware

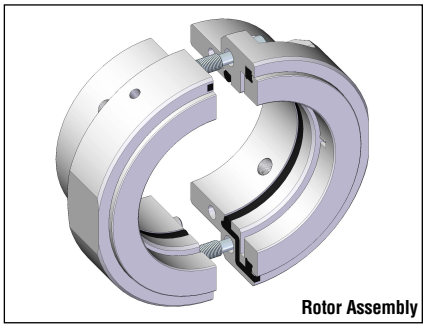
Rotor Assembly

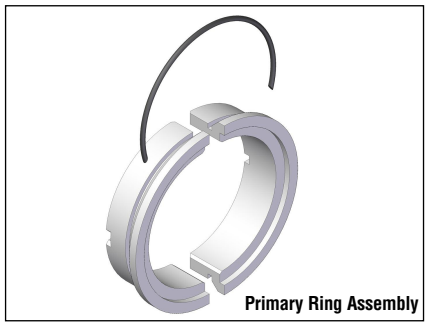
Primary Ring Assembly

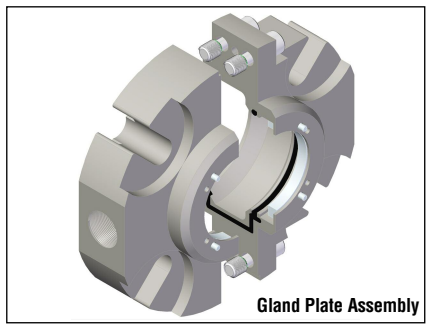
Gland Plate Assembly

Basic Pressure Ratings

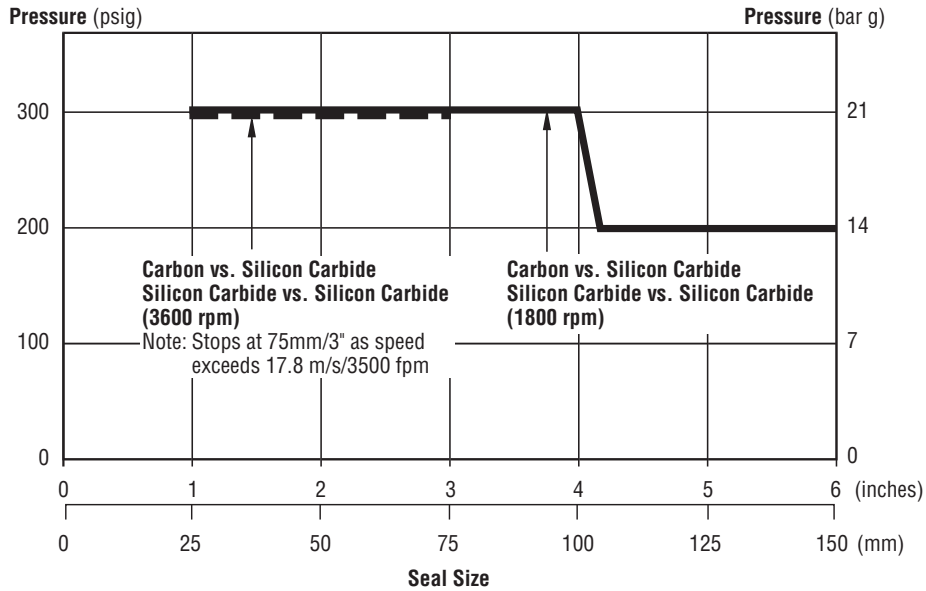

The Basic Pressure Rating is for a standard Type 3740 seal, as shown in the typical arrangement, when installed according to the criteria given in this data sheet and generally accepted industrial practices.

Contact John Crane Engineering for pressure excursion operation above the curve and up to 31.0 bar g / 450 psig.

The Basic Pressure Rating assumes stable operation at the rated speed in a clean, cool, lubricating, nonvolatile liquid, with an adequate flush rate. When used with the Multiplier Factors, the Basic Pressure Rating can be adjusted to provide a conservative estimate of the dynamic pressure rating. For process services outside this range or a more precise assessment of the dynamic pressure rating, contact John Crane for more information.

Multiplier Factors

	Selection Considerations	Multiplier Factor
Sealed Fluid Temperature	Below 80°C/175°F	x 1.00
	From 80°C to 125°C/175°F to 250°F	x 0.90

Using the Basic Pressure Rating chart, the maximum pressure would be 20.7 bar g/300 psig.

From the Multiplier Factors chart, apply the multipliers for the specific service requirements to determine the maximum operating pressure for the application.

20.7 bar g/300 psig x 0.90 = 18.6 bar g/270 psig.

Example for Determining Pressure Rating Limits

Seal: 50mm/2" diameter Type 3740

Product: Water

Face Material: Carbon vs. Silicon Carbide

Temperature: 85°C/185°F

Speed: 1800 rpm

TYPE 3740

Wet Running Cartridge Split Seal

Materials of Construction

SEAL COMPONENTS	MATERIALS	
Description	**Standard**	**Options**
Primary Ring	Carbon	Silicon Carbide
Mating Ring	Silicon Carbide	—
Gland Plate Assembly Mating Ring Adapter Assembly Spring Adapter Assembly Set	316 Stainless Steel	Alloy 20 Monel® Titanium Inconel® 625
Retaining Ring	Alloy X-750	—
Springs	Alloy C-276	—
Elastomers	Ethylene Propylene Fluoroelastomer	—

Inconel and Monel are registered trademarks of Special Metals Corporation.

For Type 3740 Installation Instructions see I-3740.
For Type 3740 Repair Kit Instructions see I-3740RK.

For your nearest John Crane facility, please contact one of the locations below.

North America
Morton Grove, IL, USA
1-800-SEALING
Tel: 1-847-967-2400
Fax: 1-847-967-3915

Europe
Slough, UK
Tel: 44-1753-224000
Fax: 44-1753-224224

Latin America
São Paulo, Brazil
Tel: 55-11-3371-2500
Fax: 55-11-3371-2599

Middle East & Africa
Dubai, United Arab Emirates
Tel: 97-1481-27800
Fax: 97-1488-62830

Asia Pacific
Singapore
Tel: 65-6512-5200
Fax: 65-6512-5233

If the products featured will be used in a potentially dangerous and/or hazardous process, your John Crane representative should be consulted prior to their selection and use. In the interest of continuous development, John Crane Companies reserve the right to alter designs and specifications without prior notice. It is dangerous to smoke while handling products made from PTFE. Old and new PTFE products must not be incinerated. ISO 9001 and ISO 14001 Certified, details available on request.

smiths
bringing technology to life

©2009 John Crane Inc. Print 06/09