TYPE 59U/59B

DIN Standard PTFE Wedge Seals

A – Seat/Mating Ring
B – Face/Primary Ring
C – Snap Ring
D – Spring
E – Disc
F – Wedge
G – Retainer

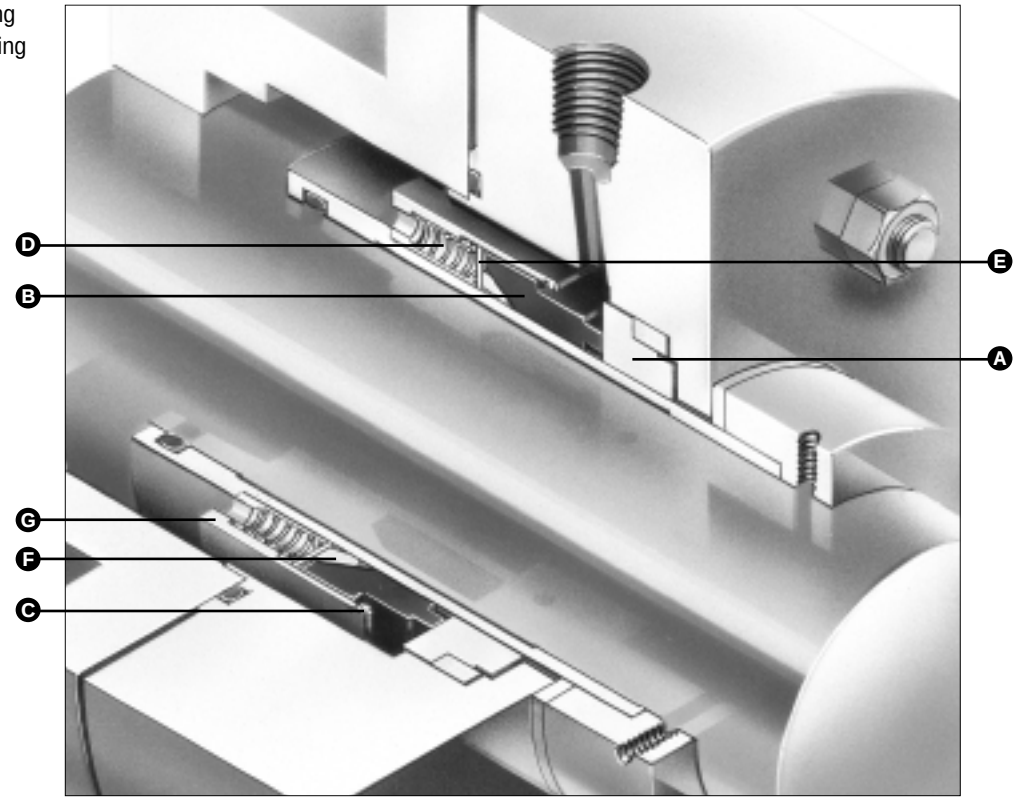

Product Description

The Type 59U is an unbalanced multispring DIN 24960 seal with a short unit fitted to a straight-through shaft. The Type 59B is a hydraulically balanced multispring DIN 24960 seal giving low face loading at high pressures.

- General chemical applications, oil refining, petro-chemical, and pharmaceutical industries.
- Suitable for use with corrosive fluids and for cryogenic and high-temperature applications.

By choosing suitable component materials, the seals can be adapted to operate with a wide range of liquids and operating conditions.

Design Features

- Compact Designs
- PTFE or Exfoliated Graphite Wedge Secondary Seal
- Multispring Design Ensures Even Face Pressure
- DIN 24960/ISO 3069 Stuffing Box Fit

Performance Capabilities

- Temperature:
  -100°C to 400°C/-150°F to 750°F
  (depending on materials used)
- Pressure:
  Type 59U - Up to 24 bar g/350 psig
  Type 59B - Up to 50 bar g/725 psig
- Speed:
  Up to 25 m/s/5000 fpm
- End Play/Axial Float Allowance:
  ±0.13mm/0.005"

TYPE 59U/59B

DIN Standard PTFE Wedge Seals

Type 59U Typical Arrangement/Dimensional Data

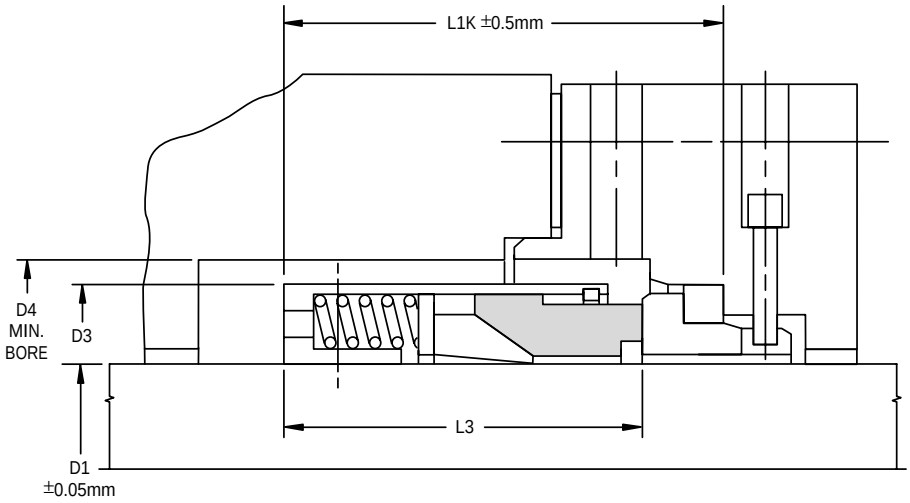

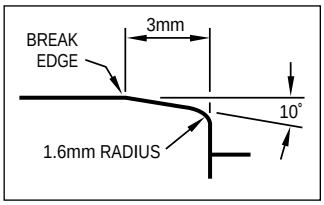

For ease of installation, the lead-in edge of the shaft or sleeve should be chamfered as shown.

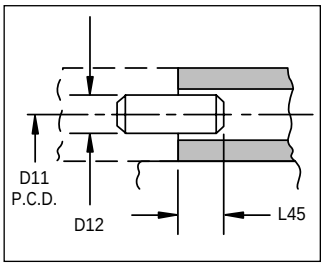

Alternative method of drive. Pin to be press fit in driving collar or impeller, and engaged in seal retainer as shown.

Type 59U Dimensional Data (mm)

Seal Size/D1 (mm)	Seal Size Code	D3	D4	D11	D12	L1K	L3	L45
14	0140	24	26	18.4	2.5	35.0	23.0	2.5
16	0160	26	28	20.4	2.5	35.0	23.0	2.5
18	0180	32	34	24.5	4.0	37.5	24.0	4.0
20	0200	34	36	26.5	4.0	37.5	24.0	4.0
22	0220	36	38	28.5	4.0	37.5	24.0	4.0
24	0240	38	40	30.5	4.0	40.0	26.7	4.0
25	0250	39	41	31.5	4.0	40.0	27.0	4.0
28	0280	42	44	34.5	4.0	42.5	30.0	4.0
30	0300	44	46	36.5	4.0	42.5	30.5	4.0
32	0320	46	48	38.5	4.0	42.5	30.5	4.0
33	0330	47	49	39.5	4.0	42.5	30.5	4.0
35	0350	49	51	41.5	4.0	42.5	30.5	4.0
38	0380	54	58	45.0	4.0	45.0	32.0	4.0
40	0400	56	60	47.0	4.0	45.0	32.0	4.0
43	0430	59	63	50.0	4.0	45.0	32.0	4.0
45	0450	61	65	52.0	4.0	45.0	32.0	4.0
48	0480	64	68	55.0	4.0	45.0	32.0	4.0
50	0500	66	70	57.0	4.0	47.5	34.0	4.0
53	0530	69	73	60.0	4.0	47.5	34.0	4.0
55	0550	71	75	62.0	4.0	47.5	34.0	4.0
58	0580	78	83	67.5	5.5	52.5	39.0	5.5
60	0600	80	85	69.5	5.5	52.5	39.0	5.5
63	0630	83	88	72.5	5.5	52.5	39.0	5.5
65	0650	85	90	74.5	5.5	52.5	39.0	5.5
68	0680	88	93	77.5	5.5	52.5	39.0	5.5
70	0700	90	95	79.5	5.5	60.0	45.5	5.5
75	0750	95	104	83.5	5.5	60.0	45.5	5.5
80	0800	104	109	89.5	5.5	60.0	45.0	5.5
85	0850	109	114	94.5	5.5	60.0	45.0	5.5
90	0900	114	119	99.5	5.5	65.0	50.0	5.5
95	0950	119	124	104.5	5.5	65.0	50.0	5.5
100	1000	124	129	109.5	5.5	65.0	50.0	5.5

TYPE 59U/59B

DIN Standard PTFE Wedge Seals

Type 59B Typical Arrangement/Dimensional Data

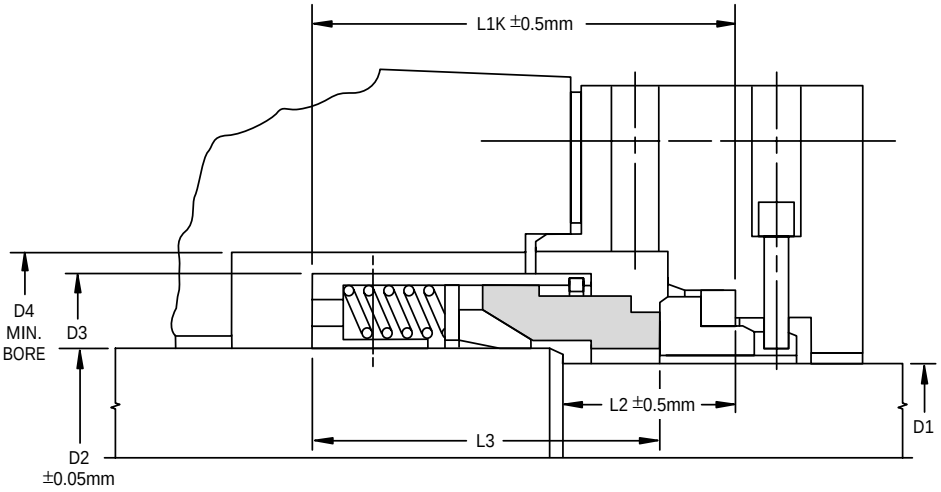

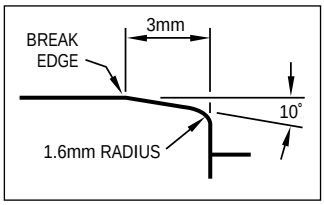

For ease of installation, the lead-in edge of the shaft or sleeve should be chamfered as shown.

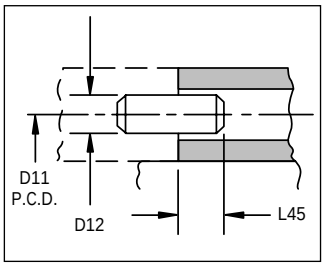

Alternative method of drive. Pin to be press fit in driving collar or impeller, and engaged in seal retainer as shown.

Type 59B Dimensional Data (mm)

Seal Size/D1 (mm)	Seal Size Code	D2	D3	D4	D11	D12	L1K	L2	L3	L45
14	0140	18	32	34	24.5	4.0	42.5	18	30.5	4.0
16	0160	20	34	36	26.5	4.0	42.5	18	30.5	4.0
18	0180	22	36	38	28.5	4.0	45.0	20	31.5	4.0
20	0200	24	38	40	30.5	4.0	45.0	20	31.5	4.0
22	0220	26	40	42	32.5	4.0	45.0	20	31.5	4.0
24	0240	28	42	44	34.5	4.0	47.5	20	34.2	4.0
25	0250	30	44	46	36.5	4.0	47.5	20	34.5	4.0
28	0280	33	47	49	39.5	4.0	50.0	20	37.5	4.0
30	0300	35	49	51	41.5	4.0	50.0	20	38.0	4.0
32	0320	38	54	58	45.0	4.0	50.0	20	38.0	4.0
33	0330	38	54	58	45.0	4.0	50.0	20	38.0	4.0
35	0350	40	56	60	47.0	4.0	50.0	20	38.0	4.0
38	0380	43	59	63	50.0	4.0	52.5	23	39.5	4.0
40	0400	45	61	65	52.0	4.0	52.5	23	39.5	4.0
43	0430	48	64	68	55.0	4.0	52.5	23	39.5	4.0
45	0450	50	66	70	57.0	4.0	52.5	23	39.5	4.0
48	0480	53	69	73	60.0	4.0	52.5	23	39.5	4.0
50	0500	55	71	75	62.0	4.0	57.5	25	44.0	4.0
53	0530	58	78	83	67.5	5.5	57.5	25	44.0	5.5
55	0550	60	80	85	69.5	5.5	57.5	25	44.0	5.5
58	0580	63	83	88	72.5	5.5	62.5	25	49.0	5.5
60	0600	65	85	90	74.5	5.5	62.5	25	49.0	5.5
63	0630	68	88	93	77.5	5.5	62.5	25	49.0	5.5
65	0650	70	90	95	79.5	5.5	62.5	25	49.0	5.5
70	0700	75	95	104	83.5	5.5	70.0	28	55.5	5.5
75	0750	80	104	109	89.5	5.5	70.0	28	55.5	5.5
80	0800	85	109	114	94.5	5.5	70.0	28	55.0	5.5
85	0850	90	114	119	99.5	5.5	75.0	28	60.0	5.5
90	0900	95	119	124	104.5	5.5	75.0	28	60.0	5.5
95	0950	100	124	129	109.5	5.5	75.0	28	60.0	5.5
100	1000	105	129	134	114.5	5.5	75.0	28	60.0	5.5

TYPE 59U/59B

DIN Standard PTFE Wedge Seals

Basic Pressure Rating

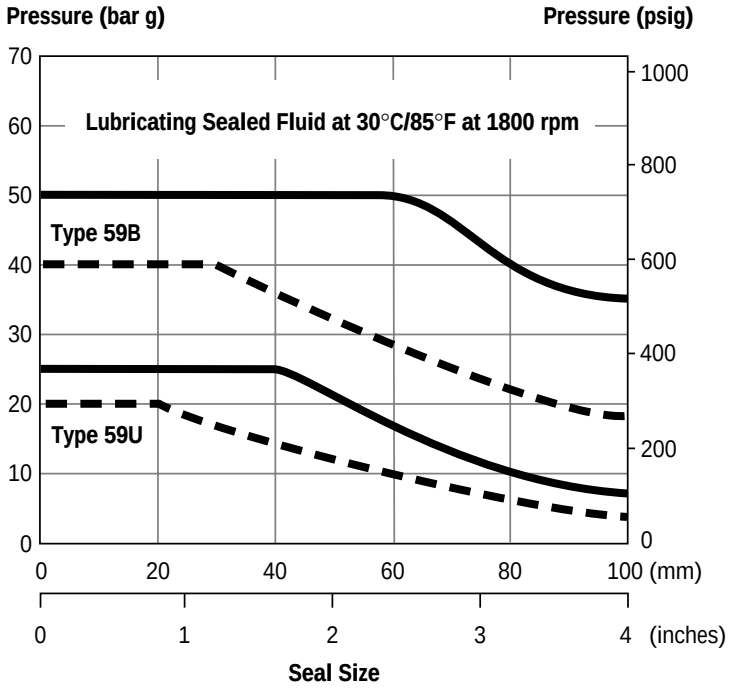

Carbon vs. Silicon Carbide or Tungsten Carbide	Carbon vs. Niresist/ Alumina Ceramic

The Basic Pressure Rating is for a standard seal, as shown in the typical arrangement, when installed according to the criteria given in this data sheet and generally accepted industrial practices.

The Basic Pressure Rating assumes stable operation at 1800 rpm in a clean, cool, lubricating, nonvolatile liquid with an adequate flush rate. When used with the multiplier factors, the Basic Pressure Rating can be adjusted to provide a conservative estimate of the dynamic pressure rating. For process services outside this range or a more accurate assessment of the dynamic pressure rating, contact John Crane for more information.

Multiplier Factors

	Selection Considerations	Multiplier Factor
Sealed Fluid Lubricity	Petrol/Gasoline, Kerosene, or Better Water, Aqueous Solutions (<80˚C/176˚F) Flashing Hydrocarbons*	x 1.00 x 0.75 x 0.60
Sealed Fluid Temperature (For Carbon Only)	Up to 80°C/175°F From 80°C to 120°C/175°F to 250°F From 120°C to 180°C/250°F to 355°F From 180°C to 230°C/355°F to 445°F	x 1.00 x 0.90 x 0.80 x 0.65
Speed	From 400 to 1800 rpm From 1800 to 3600 rpm Above 3600 or <400 rpm	x 1.00 x 1800 rpm ÷ new speed **

* The ratio of sealed pressure to vapor pressure must be greater than 1.5, otherwise consult John Crane. If the specific gravity is less than 0.60, consult John Crane.

** Contact John Crane for more information.

Example for Determining Pressure Rating Limits:

Seal: 40mm Diameter Type 59B

Product: Water

Face Material: Silicon Carbide

Operating Temperature: 60°C/140°F

Operating Speed: 3000 rpm

Using the Basic Pressure Rating graph, the maximum pressure would be 50 bar g/725 psig.

From the Multiplier Factors chart, apply the multipliers for the specific service requirements to determine the maximum operating pressure for the application:

50 bar g/725 psig x 1800 ÷ 3000 x 0.75 x 1 = 22.5 bar g/325 psig

The maximum operating pressure for this 40mm Type 59B is 22.5 bar g/325 psig.

CUT LINE FOR SHORT PAGE

TYPE 59U/59B

DIN Standard PTFE Wedge Seals

Hydrostatic Pressure Limits

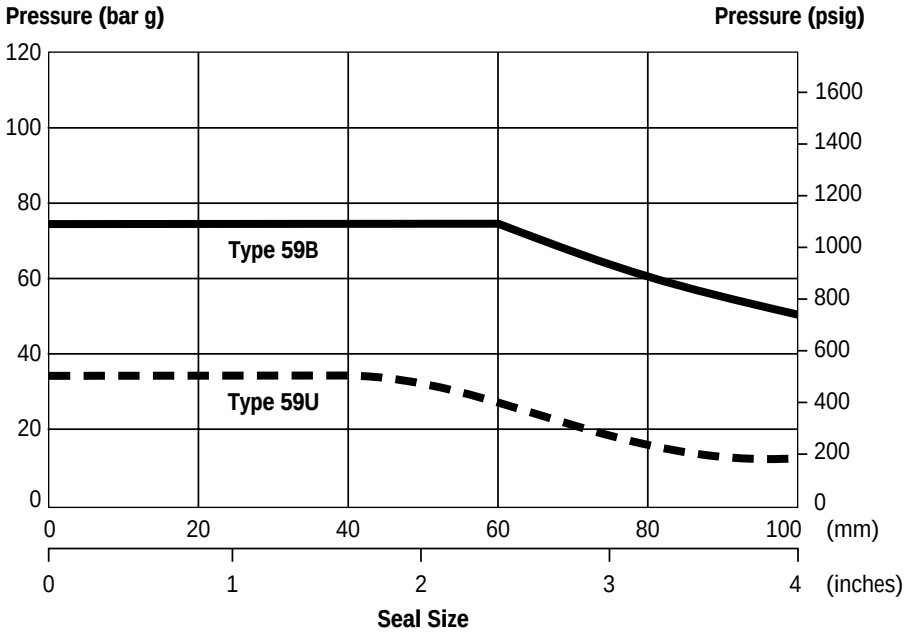

Materials of Construction

SEAL COMPONENTS	MATERIALS	
Description	**Standard**	**Options**
Face/Primary Ring	Resin-Impregnated Carbon Graphite Silicon Carbide-Coated Graphite	Antimony-Impregnated Carbon Graphite Sintered Silicon Carbide
Seat/Mating Ring	Sintered Silicon Carbide	Alumina Ceramic Tungsten Carbide
Seat O-Ring/Mating Ring	Nitrile Fluorocarbon Ethylene Propylene	Perfluoroelastomer
Retainer Disc Snap Ring Seat Securing Ring Set Screws Springs	316 Stainless Steel	Alloy 400 (Monel®) Alloy C-276 (UNS N10276)
Wedge	Pure PTFE	Exfoliated Graphite Glass-Filled PTFE*

*Type 59U only. Monel is a registered trademark of Inco Alloys International, Inc.

CUT LINE FOR SHORT PAGE

TYPE 59U/59B

DIN Standard PTFE Wedge Seals

John Crane

North and Latin Americas
Morton Grove, Illinois USA

Tel: 1-847-967-2400
Fax: 1-847-967-3915
1-800-SEALING

Europe, Middle East, Africa
Slough, UK

Tel: 44-1753-224000
Fax: 44-1753-224224

Asia Pacific
Singapore

Tel: 65-222-9161
Fax: 65-223-5035

TI Group
Global Specialised Engineering

For your nearest John Crane facility, please contact one of the locations above.

If the products featured will be used in a potentially dangerous and/or hazardous process, your John Crane representative should be consulted prior to their selection and use. In the interest of continuous development, John Crane Companies reserve the right to alter designs and specifications without prior notice. It is dangerous to smoke while handling products made from PTFE. Old and new PTFE products must not be incinerated.

©2000 John Crane Print 10/00