TSE

METASTREAM® Close Coupled T Series Coupling

A – Stainless Steel, Flexible Discs
B – Overload Collars
C – Anti-Corrosion Treatment
D – Axially Split Spacer for Ease of Maintenance
E – Self-Locking Fasteners
F – Compression/ Jacking Bolt Feature
G – Hubs Designed for Short DBSE

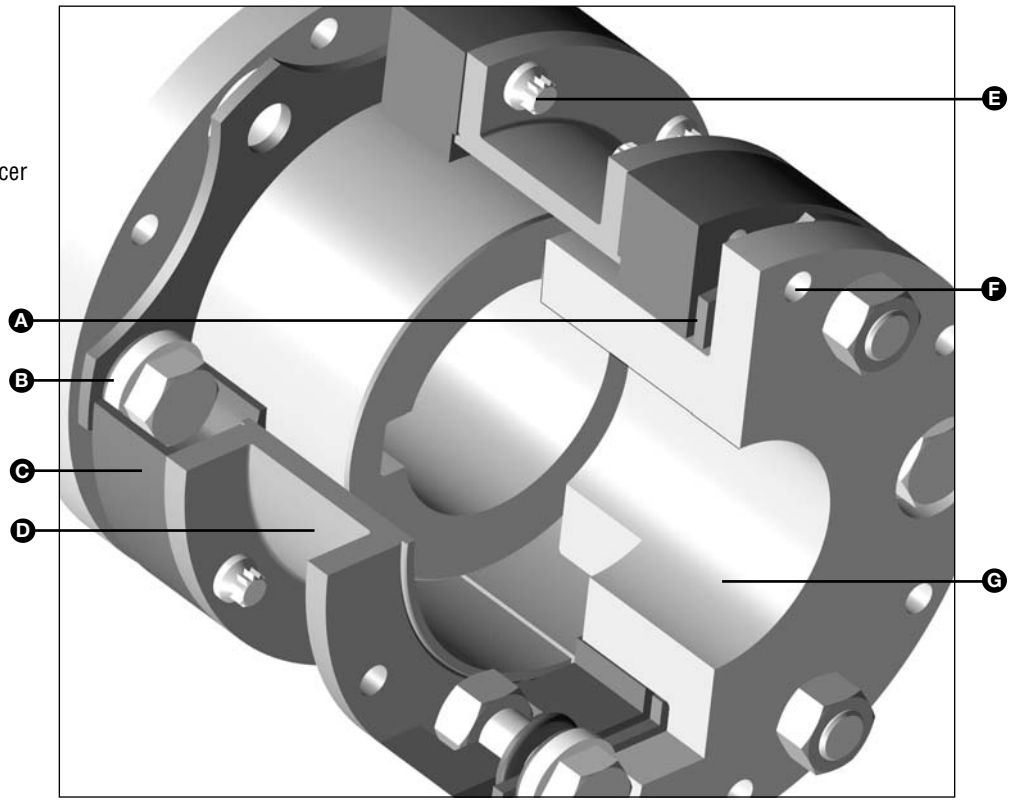

Product Description

Metastream® TSE range of membrane couplings has been specifically designed to provide a solution for close coupled machinery. The key benefit of this coupling is the ability to replace flexing discs without the need to move either of the connected machines.

- Easy maintenance without moving machines.
- Close coupled DBSE, fully variable from 0.125" upwards.
- Coated carbon steel for corrosion protection.
- Choice of hub configuration to suit DBSE.
- Designed for the life of the connected machines.

Design Features

- **Fit and Forget:** The TSE coupling is designed for infinite life and, with correct machinery alignment, will outlast the machines it is connected to.
- **Overload Protection:** The coupling is fitted with overload collars to protect the discs in the event of severe torsional overload.
- **Low Imposed Loads:** The discs have been designed to optimize their torque capability, while minimizing the reaction forces due to misalignment.
- **Zero Maintenance:** The coupling has no relative moving parts, and hence requires no lubrication or routine maintenance.
- **Ease of Assembly:** In the unlikely event the coupling does require maintenance, the discs can be replaced without moving the connected machines.
- **No Backlash:** The coupling design, with fitted bolts and torsionally stiff discs, insure that there is zero backlash. This makes the coupling ideal for drives such as machine tool indexers, printing presses, packing and all applications where constant speed is crucial.

Metastream is a registered trademark of John Crane Inc.

TSE

METASTREAM® Close Coupled T Series Coupling

TSE Technical Data

Coupling Size	Rating HP/100 rpm	Max. Continuous Torque lb-in	Peak Overload Torque lb-in	Max. Speed rpm	Complete Coupling (Blank Bore) Weight lb	Complete Coupling (Blank Bore) Moment of Inertia lb-in^2
0075	10	6,300	12,600	8,700	18.4	47
0135	18	11,340	22,680	7,500	30.1	111
0230	31	19,520	39,040	6,400	51.5	276
0350	47	29,600	59,200	5,800	74.8	507
0500	67	42,200	84,400	5,200	105.3	902
0740	99	62,360	124,720	4,800	145.0	1566
0930	125	78,740	157,480	4,500	190.6	2455
1400	188	118,440	236,880	4,000	255.3	4049

Typical Arrangement

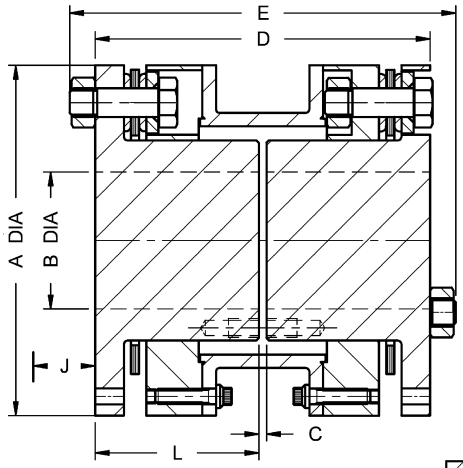

TSE1

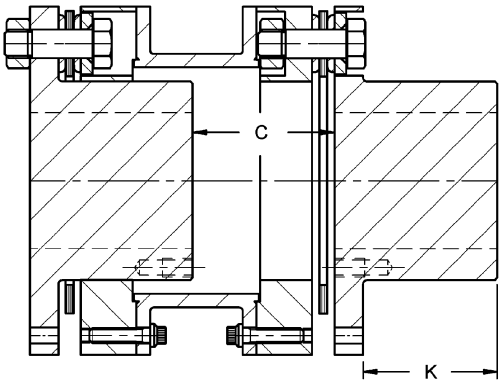

TSE2

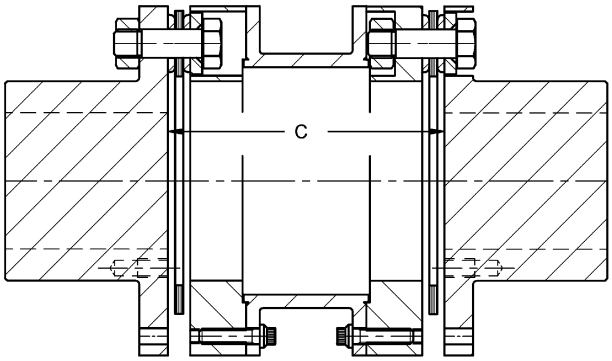

TSE3

Dimensional Data (Inches)

Coupling Size	A	B Max. Bore	C TSE1 Std.	C TSE1 Max.	C TSE2 Std.	C TSE2 Max.	C TSE3	D	E	J	K	L Max.	L Min.
0075	4.84	1.75	0.125	2.21	2.17	3.21	4.22	5.00	5.69	1.91	2.05	2.44	1.40
0135	5.76	2.25	0.125	1.91	2.34	3.23	4.56	5.51	6.34	2.05	2.22	2.69	1.80
0230	6.97	2.75	0.188	2.03	2.76	3.68	5.33	6.43	7.36	2.72	2.57	3.12	2.20
0350	7.81	3.19	0.188	2.08	3.06	3.96	5.93	7.19	8.31	2.81	2.87	3.50	2.60
0500	8.78	3.56	0.188	2.25	3.36	4.34	6.53	7.95	9.22	2.89	3.17	3.88	2.90
0740	9.88	3.94	0.250	2.45	3.71	4.76	7.18	8.75	10.08	2.92	3.46	4.25	3.20
0930	10.79	4.50	0.250	2.43	4.07	5.16	7.90	9.63	11.13	4.00	3.82	4.69	3.60
1400	12.00	4.56	0.250	3.07	4.36	5.73	8.48	10.37	11.88	4.01	4.12	5.06	3.70

NOTES: 1. Dimensions should not be used for construction. Certified dimensions furnished upon request.
2. Weight and inertia values based upon minimum DBSE and unbored hubs.
3. Maximum bores are based on standard AGMA square key dimensions.
4. Dimension J is minimum required for field repair.

TSE

METASTREAM® Close Coupled T Series Coupling

Selection Procedure

1. Select appropriate service factor SF from table.
2. Calculate coupling rating R from
   $R = \frac{HP \times 100 \times SF}{N}$
   where:
   HP = driver rated power
   N = speed (rev./min.)
3. Select a coupling with the same or higher rating.
4. Check that the hub bore capacity is suitable, if not select a larger size coupling.
5. Check peak torque capability is suitable for application.
6. Check speed capability.
7. Specify Distance Between Shaft Ends (DBSE).

Example:

250 HP electric motor connected to centrifugal pump at 3600 rpm with a 0.25 inch DBSE.

SF = 1.0

$R = \frac{250 \times 100 \times 1.0}{3600}$

R = 6.9 HP per 100 rpm

Selection: TSE1 - 0075

Maximum parallel shaft bore is 1.75"
Peak torque capability .....15,750 lb.-in.
Maximum speed capability is 8,700 rpm. Coupling does not normally require additional balancing.

Designation — **TSE1 - 0075 - 00## - 0064**

Service Factor SF

Suggested service factors for electric motor, steam turbine, and gas turbine drivers are given below.

Torque Variation	Typical Application	Service Factor
Constant Torque	Centrifugal Pump Centrifugal Compressor Axial Compressor Centrifugal Blower	1.0*
Slight Torque Fluctuations	Screw Compressor Gear, Lobe, and Vane Pumps Forced Draft Fan Medium-Duty Mixer Lobe Blower	1.5
Substantial Torque Fluctuations	Reciprocating Pumps Heavy-Duty Mixers Induced Draft Fans	2.0

*Use a minimum service factor of 1.25 on electric motor drives through a gearbox.

The examples given are for typical machines, and are empirically based guidelines. Knowledge of actual torque characteristics may indicate a different service factor. For example, variable-speed electric motors may exhibit a fluctuating torque characteristic. Consult John Crane for advice.

Available Options

- Spark-resistant coupling for hazardous zone operation.
- Special materials for low temperature applications and/or higher corrosion resistance.

Consult John Crane for any other special requirements. Metastream couplings can be adapted to suit virtually all power transmission coupling needs.

TSE

METASTREAM® Close Coupled T Series Coupling

Coupling Alignment

Correct installation and alignment of coupling is essential for reliable machinery performance.

John Crane supplies a variety of shaft alignment equipment and offers alignment training courses.

Coupling Size	Max. Axial Misalignment * +/- inch	Max. Parallel Misalignment ** +/-inch
0075	0.06	0.034
0135	0.08	0.037
0230	0.10	0.043
0350	0.11	0.048
0500	0.13	0.053
0740	0.15	0.058
0930	0.17	0.064
1400	0.20	0.068

These values are maximums for each type of misalignment. It is recommended that the coupling be initially aligned to 10% of these values to allow for inevitable movements during the life of the machines.

* Meets NEMA end float specification without modification.

** Values based on angular deflection of 1/2° per end.

The angular and axial restoring forces in the table below are given at maximum deflection. The chart can be used to determine forces across the full deflection range. The nonlinear characteristics can detune a system to prevent high amplitude axial vibration.

FORCE VS. DEFLECTION

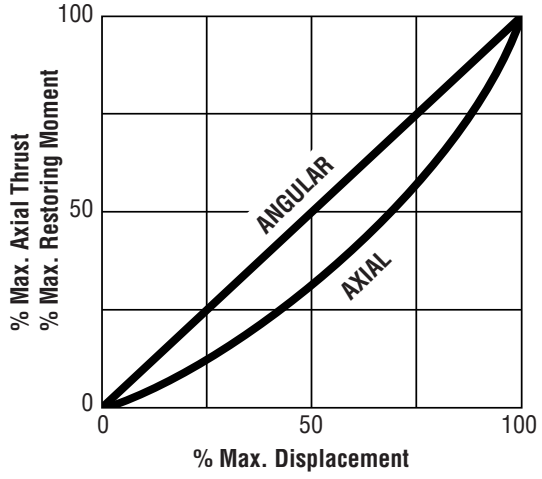

Balance Recommendations

The inherent balance of the TSE range of couplings meets AGMA standard 9000-C90 class 8. The adjacent chart relates the coupling sizes to operating speeds on the basis of this AGMA class 8 characteristic to provide a general guide to maximum permissible speed. If higher speeds are required, contact John Crane for an alternative coupling selection.

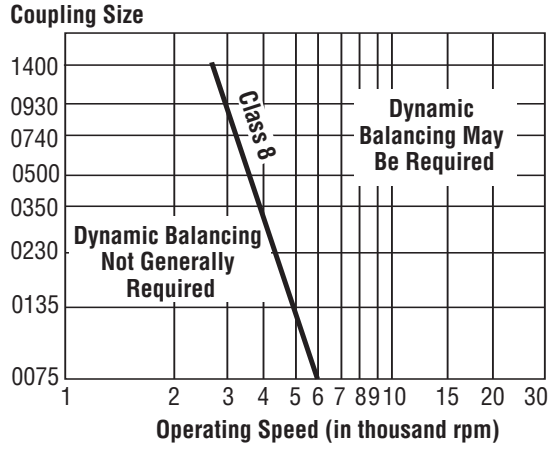

Europe
Slough, UK
Tel: 44-1753-224000
Fax: 44-1753-224224

North America
Houston
Tel: 1-713-944-6690
Fax: 1-713-946-8252

Latin America
São Paulo, Brazil
Tel: 55-11-3371-2500
Fax: 55-11-3371-2599

Middle East & Africa
Dubai, United Arab Emirates
Tel: 971-4-3438940
Fax: 971-4-3438970

Asia
Singapore
Tel: 65-6512-5200
Fax: 65-6512-5233

For your nearest John Crane facility, please contact one of the locations above.

If the products featured will be used in a potentially dangerous and/or hazardous process, your John Crane representative should be consulted prior to their selection and use.
In the interest of continuous development, John Crane Companies reserve the right to alter designs and specifications without prior notice.

©2006 John Crane Print 09/06

www.johncrane.com ISO 9001, ISO 14001, ISO/TS 16949 Certified. Details available on request.

smiths