TYPE 613

Wet/Dry Running Cartridge Sealol® Metal Bellows Seal

A – Seat/Mating Ring
B – Insert
C – O-Ring
D – Sealol Bellows
E – Sleeve
F – Compression Ring Assembly

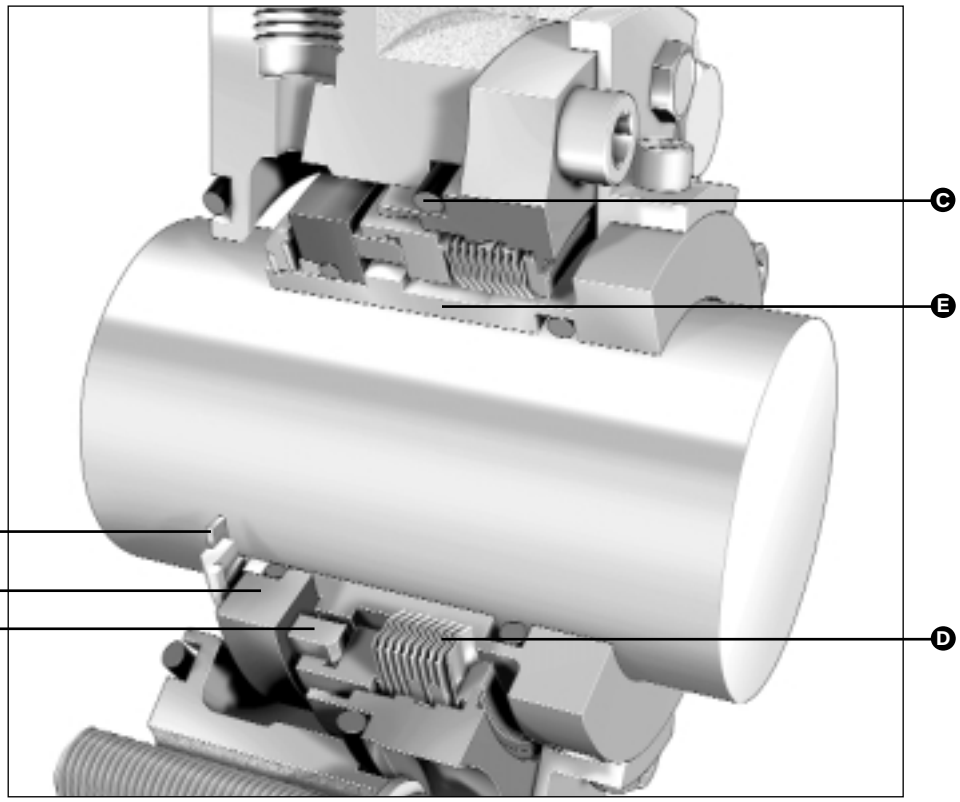

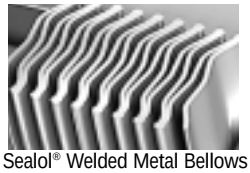

Sealol® Welded Metal Bellows

Product Description

The Type 613 is a Single Bellows Cartridge Seal utilizing performance-proven ECS technology.

- Operates wet with reliable intermittent dry-running capability.
- Target applications include batch processes, tank farms, loading and unloading platforms and intermittent processes.

Design Features

- Dry-Sliding Technology
- Compact and Easy-to-Install Cartridge Design
- Only One Moving Part the Bellows
- Eliminates O-Ring “Hang-up” Problems
- Fits ANSI Standard and Enlarged Bore Pumps, as well as Metric Pumps
- Available with a Variety of Elastomers

Performance Capabilities

- Temperature:
  -75°C to 200°C/-100°F to 400°F
  (depending on elastomer specified)
- Pressure:
  Normal Running Mode: partial vacuum to 10 bar g/150 psig
  Dry Running Mode: partial vacuum to 1 bar g/15 psig
- Speed:
  Up to 25 m/s/5,000 fpm
- End Play/Axial Float Allowance:
  0.13mm/0.005" FIM max.
- Shaft Runout:
  0.001mm per mm/0.001" per inch of shaft diameter FIM max.

Sealol is a registered trademark of John Crane.

TYPE 613

Wet/Dry Running Cartridge Sealol® Metal Bellows Seal

Type 613 Typical Arrangement/Dimensional Data

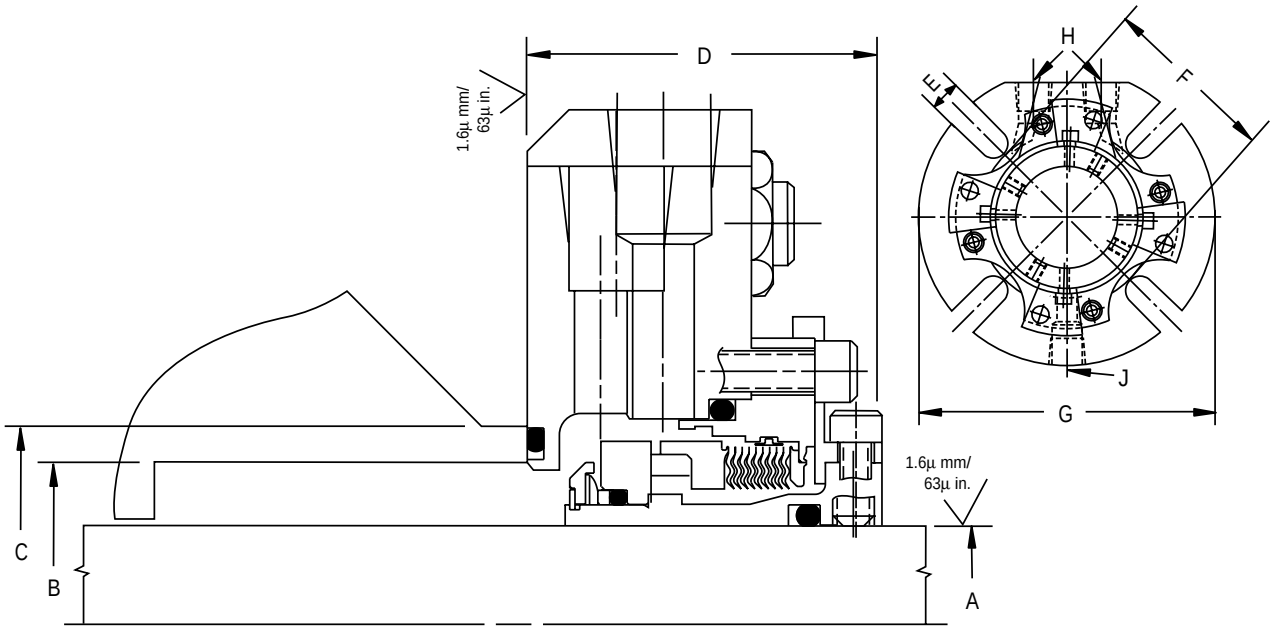

Type 613 Dimensional Data (mm)

Seal Dash Number	Shaft Size A +0.00/-0.05	B	C	D	E	F	G	H	J
-033	33	53.98	60.33	52.43	12.70	71.45	117.48	1/4-18	3/8-18
-035	35	53.98	60.33	52.43	12.70	71.45	117.48	1/4-18	3/8-18
-043	43	66.68	76.19	53.98	14.27	85.73	119.35	3/8-18	3/8-18
-045	45	66.68	76.19	53.98	14.27	85.73	119.35	3/8-18	3/8-18
-053	53	83.00	95.00	61.90	14.27	100.03	152.40	3/8-18	3/8-18
-055	55	83.00	95.00	61.90	14.27	100.03	152.40	3/8-18	3/8-18
-065	65	92.08	107.95	70.64	17.45	122.25	171.45	3/8-18	3/8-18

Type 613 Dimensional Data (inches)

Seal Dash Number	Shaft Size A +0.000/-0.002	B Max.	C Min.	D	E	F	G	H	J
-24	1.125	2.000	2.250	2.00	0.44	2.44	4.625	1/4-18	3/8-18
-28	1.375	2.125	2.375	2.06	0.50	2.81	4.625	1/4-18	3/8-18
-28*	1.375	2.875	3.312	2.06	0.44	3.44	5.250	1/4-18	3/8-18
-34	1.750	2.625	3.000	2.13	0.56	3.38	5.500	3/8-18	3/8-18
-34*	1.750	3.500	3.937	2.13	0.69	4.44	6.750	3/8-18	3/8-18
-36	1.875	2.750	3.125	2.19	0.56	3.31	5.500	3/8-18	3/8-18
-36*	1.875	3.625	4.125	2.56	0.56	4.44	6.000	3/8-18	3/8-18
-40	2.125	3.062	3.437	2.44	0.56	3.94	6.000	3/8-18	3/8-18
-40*	2.125	4.000	4.437	2.44	0.75	4.75	7.250	3/8-18	3/8-18
-46	2.500	3.500	4.000	2.63	0.75	4.25	6.750	3/8-18	3/8-18
-46*	2.500	4.750	5.250	2.63	0.69	5.56	8.000	3/8-18	3/8-18
-48	2.625	3.625	4.250	2.78	0.69	4.81	6.750	3/8-18	3/8-18
-48*	2.625	4.625	5.125	2.78	0.69	5.31	7.375	3/8-18	3/8-18

*Enlarged seal chamber version.

TYPE 613

Wet/Dry Running Cartridge Sealol® Metal Bellows Seal

Maximum Dynamic Pressure Limits

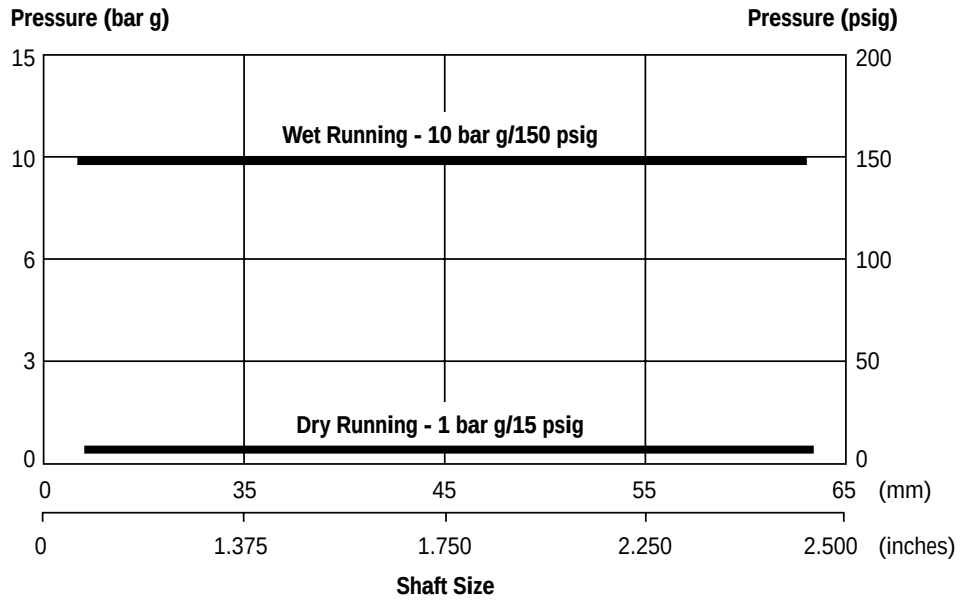

Minimum Dynamic Pressure Limits - Wet or Dry Running

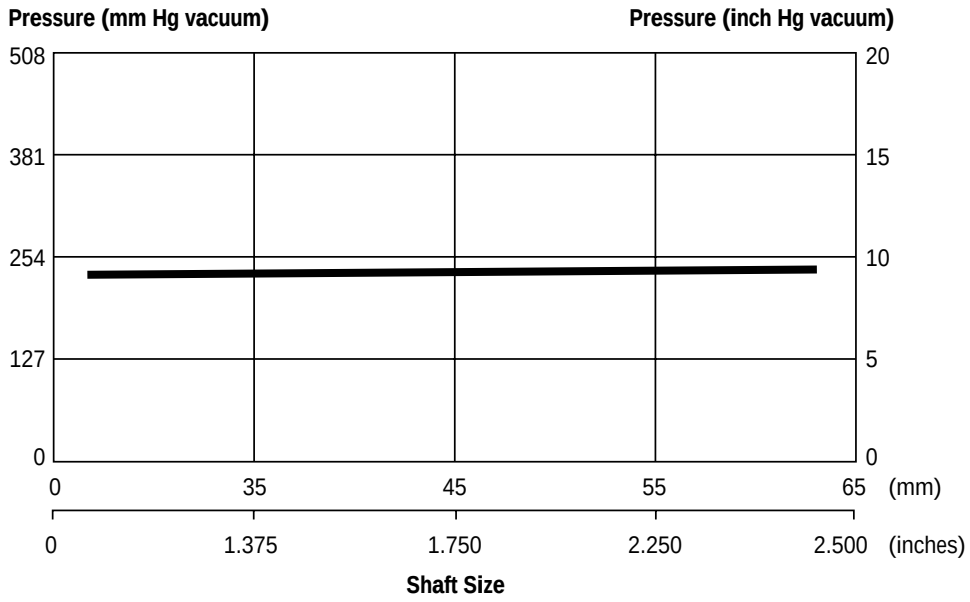

TYPE 613

Wet/Dry Running Cartridge Sealol® Metal Bellows Seal

Materials of Construction

SEAL COMPONENTS	MATERIALS	
Description	**Standard**	**Options**
Seat/Mating Ring	Silicon Carbide	—
Insert	Carbon	—
Sleeve	316 Stainless Steel	Alloy 20
Gland	Alloy 20 (UNS N08020)	—
Bellows	Alloy C-276 (UNS N10276)	—
Elastomers	Fluorocarbon EPR Perfluoroelastomer PTFE-Encapsulated Fluorocarbon	—

Sealol Welded Metal Bellows

Design Features

- Optimum 45° Tilt Angle
- Three-Sweep Radius
- Nesting Ripple Plate Design
- Static Secondary Seal
- Light Spring Loads

Sealol Bellows Benefits

- Uniform Plate Rigidity and Stress Distribution
- Enhanced Fatigue Strength
- Pressure-Balanced by Design
- Less Heat
- Low Power Consumption

Typical Applications

- Acids
- Aqueous Solutions
- Caustics
- Chemicals
- Food Products
- Hydrocarbons
- Lubricating Fluids
- Slurries (non-abrasive)
- Solvents
- Thermo-Sensitive Fluids
- Viscous Fluids and Polymers
- Water

The Type 613 is recommended in clean applications where abrasives will not damage the carbon seal ring.

TYPE 613

Wet/Dry Running Cartridge Sealol® Metal Bellows Seal

Piping Plans

The Type 613 bellows cartridge seal is normally operated with ANSI Plan 7302 (API Plan 02), which calls for a dead-ended seal chamber. The Type 613 also provides a means of recirculating the product or removing air from the seal chamber to extend seal life. The most popular piping plans are shown below for your reference.

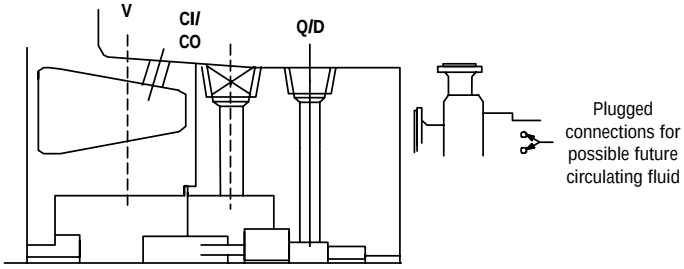

ANSI Plan 7302 (API Plan 02)

Normally specified for clean fluids, this plan calls for a dead-ended seal chamber with no circulation of flush fluid. The seal cavity may be jacketed, and a heating or cooling fluid can be circulated through the jacket. A throat bushing may be required when specified.

ANSI Plan 7311 (API Plan 11)

This plan requires installation of a recirculation line from the pump case discharge through an orifice to the gland flush connection. The primary purpose of this plan is to dissipate heat generated at the seal faces and/or build seal chamber pressure.

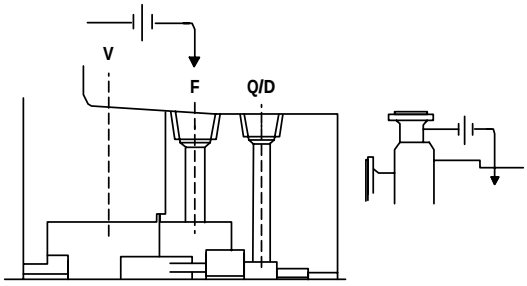

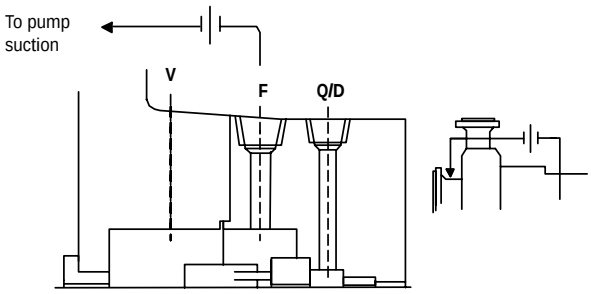

ANSI Plan 7313 (API Plan 13)

This piping plan requires the installation of a recirculation line from the gland flush connection back to the pump suction. ANSI Plan 7313 is frequently used on vertical pumps to vent vapors from the seal chamber. It is also used in applications where the seal chamber pressure is at or near discharge pressure. When utilizing this piping plan on a horizontal pump, the flush connection should be located at the top of the gland to ensure that there are no air pockets in the seal chamber.

TYPE 613

Wet/Dry Running Cartridge Sealol® Metal Bellows Seal

Asia Pacific
Singapore
Tel: 65-861-1288
Fax: 65-862-4117

Europe, Middle East, Africa
Slough, UK
Tel: 44-1753-224000
Fax: 44-1753-224224

Latin America
São Paulo, Brazil
Tel: 55-11-3049-9979
Fax: 55-11-3849-4511

North America
Morton Grove, Illinois USA
1-800-SEALING
Tel: 1-847-967-2400
Fax: 1-847-967-3915

smiths
A part of Smiths Group plc

For your nearest John Crane facility, please contact one of the locations above.

If the products featured will be used in a potentially dangerous and/or hazardous process, your John Crane representative should be consulted prior to their selection and use. In the interest of continuous development, John Crane Companies reserve the right to alter designs and specifications without prior notice. It is dangerous to smoke while handling products made from PTFE. Old and new PTFE products must not be incinerated.

©2001 John Crane Print 9/01