TYPE 2800XP

Gas-Lubricated, Non-Contacting Double Cartridge Seal

A – Seat/Mating Ring
B – Face/Primary Ring
C – Inboard Gland Plate
D – Sleeve
E – Outboard Gland Plate
F – Setting Clips
G – Drive Collar

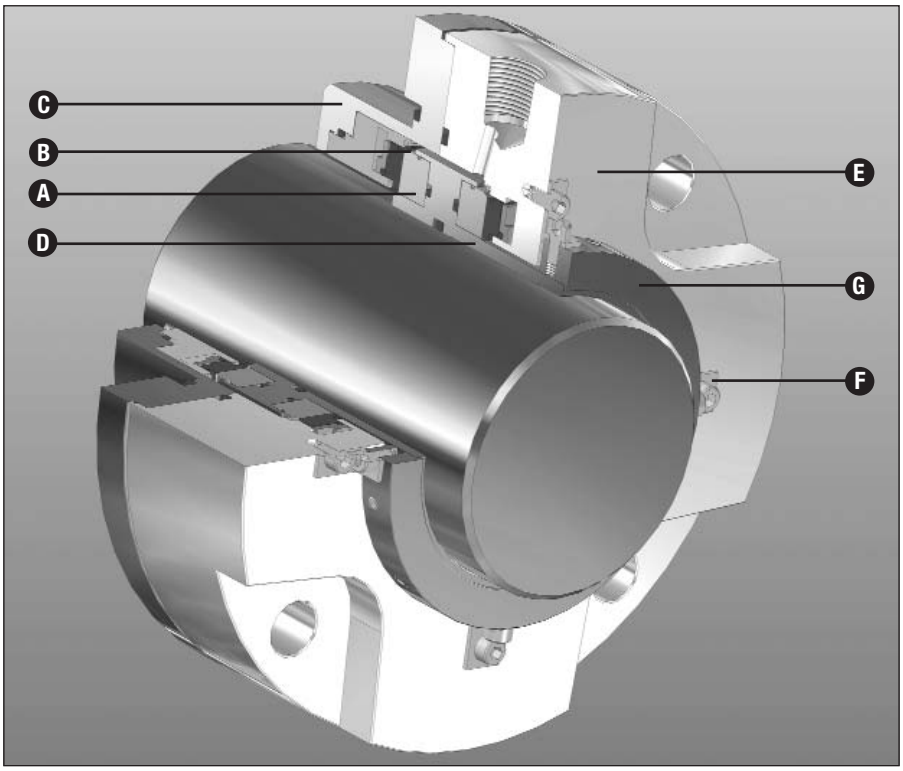

Spiral Groove Technology

Product Description

- Gas lubricated non-contact dual seal that offers the best available process containment technology in pumping services.
- For high reliability sealing of volatile and hazardous fluids in chemical and petrochemical processes.
- Double seal alternative for positive sealing of high-purity fluids without potential for product contamination.
- For use in large bore seal chambers.
- Size range according to API 682.
- For sealing fluids that are sensitive to thermal gain or loss.

Design Features

- Full process containment
- Reverse Pressure Capability
- Spiral Groove Technology
- Non-Contacting Operation
- Simplified Gas Barrier Support System

Performance Capabilities

- Temperature:
  -40°C to 260°C/-40°F to 500°F
- Pressure:
  Up to 42 bar g/600 psig max.
- Speed:
  1000 - 3600 rpm

* Conditions that vary from those listed above can be sealed using other 2800 Series products. Consult John Crane Engineering at the locations on the back page.

TYPE 2800XP

Gas-Lubricated, Non-Contacting Double Cartridge Seal

Type 2800XP Typical Arrangement / Dimensional Data

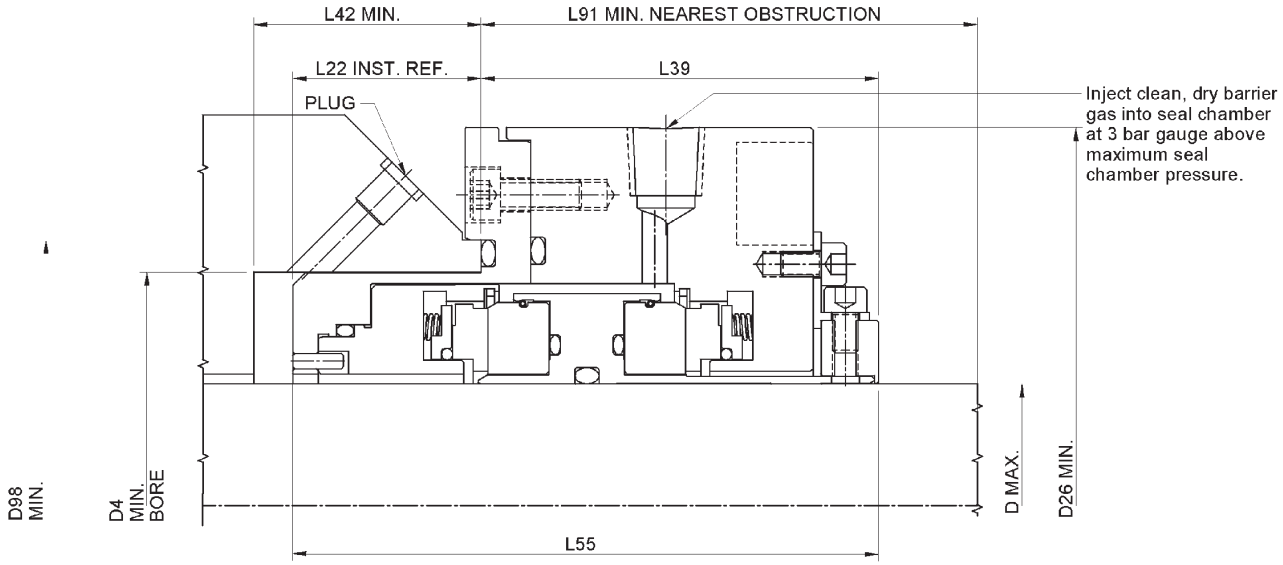

Type 2800XP Dimensional Data (mm)

Seal Size (mm)	D	D4	D26	L55	L39	L91 Min.	L42 Min.	L22 Inst. Ref.	D98 Min.	Min. Stud Dia.	Gland Stud PCD
30mm	30.00	80.00	140.00	108.26	55.68	100.00	55.00	52.58	95.00	M12	115.00
38mm	38.00	76.20	139.70	108.75	56.63	59.63	55.12	52.12	95.20	M12	114.30
40mm	40.00	90.00	147.00	110.65	53.58	100.00	60.00	57.07	105.00	M12	125.00
43mm	43.00	88.90	165.10	115.15	65.33	68.33	52.82	49.82	110.24	M12	139.70
48mm	48.00	92.08	149.24	115.69	78.50	81.50	40.19	37.19	104.78	M12	127.00
50mm	50.00	100.00	166.00	114.05	63.98	110.00	55.00	50.07	115.00	M16	140.00
53mm	53.00	98.42	180.98	116.15	63.33	66.33	55.82	52.82	119.66	M16	152.40
60mm	60.00	120.00	185.00	114.37	55.30	110.00	60.00	59.07	135.00	M16	160.00
70mm	70.00	130.00	196.00	115.15	66.08	110.00	65.00	49.07	145.00	M16	170.00
80mm	80.00	140.00	206.00	118.17	71.80	110.00	70.00	46.37	155.00	M16	180.00
90mm	90.00	160.00	240.00	121.87	79.80	120.00	65.00	42.07	175.00	M20	205.00
100mm	100.00	170.00	248.00	117.87	74.80	120.00	70.00	43.07	185.00	M20	215.00
110mm	110.00	180.00	256.00	119.87	78.80	120.00	75.00	41.07	195.00	M20	225.00

Contact John Crane for other sizes.

Seal Pressure Rating

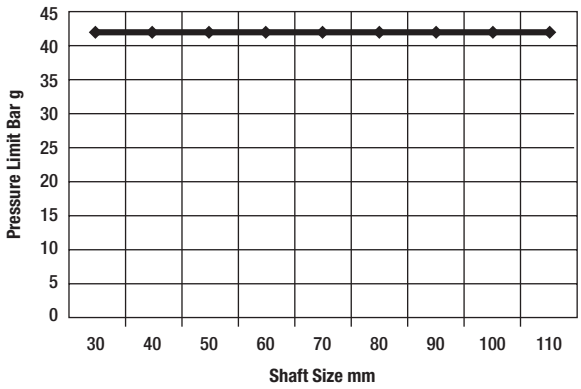

Barrier Pressure must be set at a minimum of 3 bar g (43.5 psig) above maximum seal chamber pressure

TYPE 2800XP

Gas-Lubricated, Non-Contacting Double Cartridge Seal

Gas Consumption

Gas consumption is dependent on barrier pressure, shaft speed, and may be affected by other application conditions. Contact John Crane for specific advice.

Materials of Construction

SEAL COMPONENT	MATERIAL	CODE
PRIMARY RING		
- Standard	Nickel Chrome Carbon	605
- Options	Antimony Carbon	348
MATING RING		
- Standard	* Tungsten Carbide	005
- Options	* Silicon Carbide	277
O-RINGS		
- Standard	Fluorocarbon	134
- Options	* Perfluoroelastomer	394
	Nitrile	130

SEAL COMPONENT	MATERIAL	CODE
SPRINGS		
- Standard	Stainless Steel	001
OTHER		
TYPICAL HARDWARE		
- Gland Plate	316 Stainless Steel	001
- Sleeve		
- Drive Collar		
- Retainer		
- Thrust Ring		
- Options	Hastelloy C-276 (UNS N 10276)	033
	Titanium	032

* Other grades of WC / SiC / FFKM are also available

Gas Control Panel

Instrumentation requirements which differ from the panel pictured can be accommodated. Contact John Crane.

SIDE VIEW

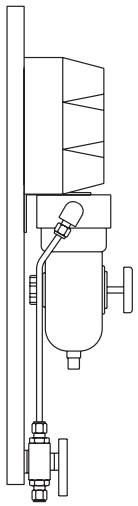

FRONT VIEW

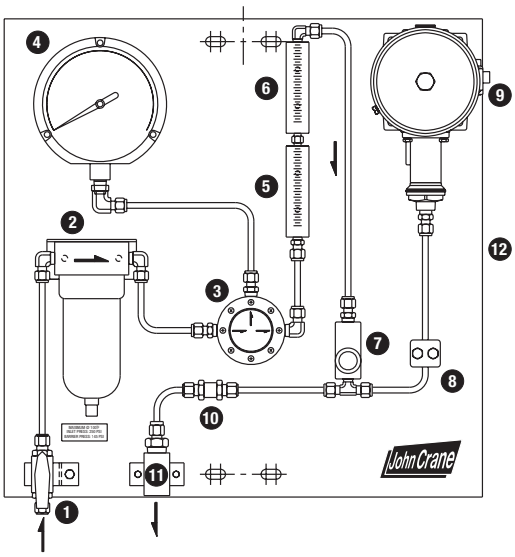

GAS FLOW SCHEMATIC

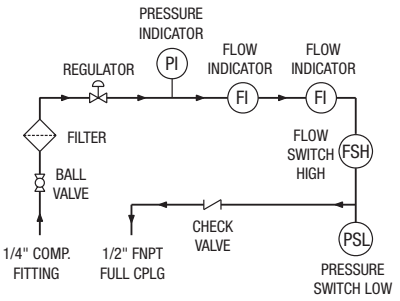

1. Ball Valve
2. Coalescing Filter
3. Pressure Regulator
4. Pressure Guage
5. Flow Meter - Low Range
6. Flow Meter - High Range
7. Flow Switch High
8. Tubing Clamp
9. Pressure Switch Low
10. Check Valve
11. Coupling to Seal
12. Back Panel

TYPE 2800XP

Gas-Lubricated, Non-Contacting Double Cartridge Seal

For your nearest John Crane facility, please contact one of the locations below.

Europe
Slough, UK
Tel: 44-1753-224000
Fax: 44-1753-224224

North America
Morton Grove
Tel: 1-847-967-2400
Fax: 1-847-967-3915

Latin America
São Paulo, Brazil
Tel: 55-11-3371-2500
Fax: 55-11-3371-2599

Middle East & Africa
Dubai, United Arab Emirates
Tel: 00-97-1488-39510
Fax: 00-97-1488-37766

Asia Pacific
Singapore
Tel: 65-6512-5200
Fax: 65-6512-5233

smiths
bringing technology to life

If the products featured will be used in a potentially dangerous and/or hazardous process, your John Crane representative should be consulted prior to their selection and use. In the interest of continuous development, John Crane Companies reserve the right to alter designs and specifications without prior notice. ISO 9001, ISO 14001, ISO/TS 16949 Certified. Details available on request.

©2007 John Crane Print 04/07