TYPE 2100

Elastomer Bellows Unitised Seal

Industries Served

Chemical Processing
Conveyor and Industrial Equipment
Food Processing
Gas Compression
Industrial Blowers and Fans
Marine
Mixers and Agitators
Oil and Refinery
Paint and Ink
Pharmaceutical
Pipeline
Power Generation
Pulp and Paper
Water Systems
Wastewater Treatment
Water Desalination

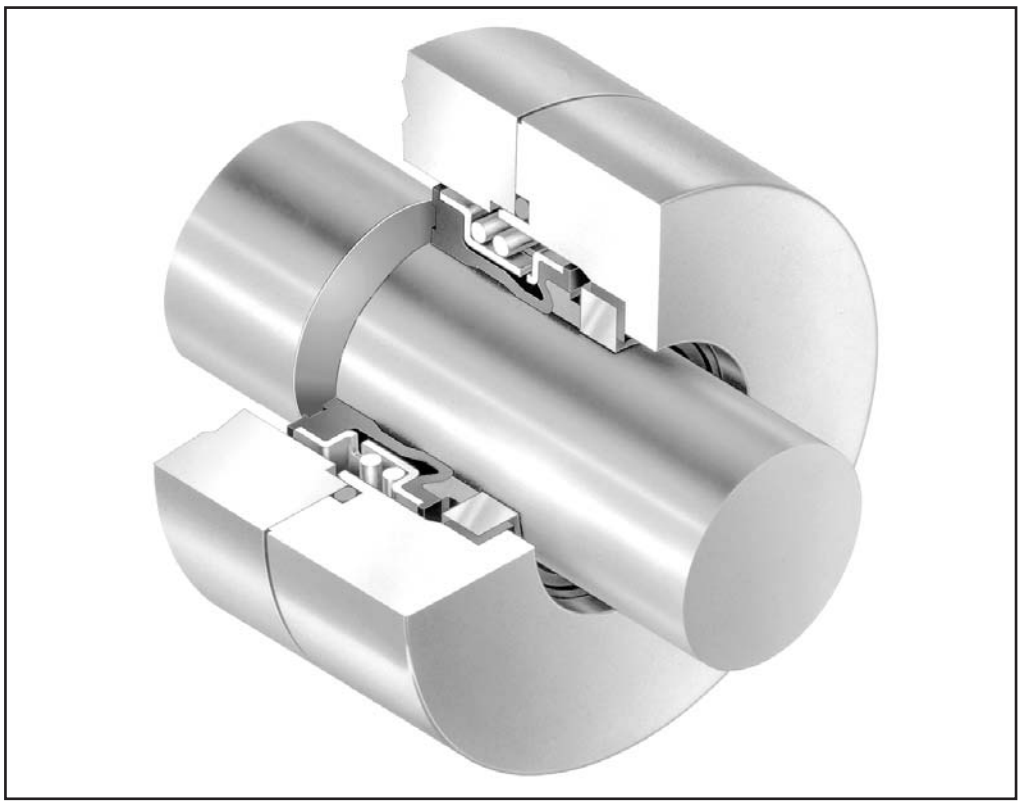

Product Description

The Type 2100 is a compact, unitised, single spring, elastomer bellows mechanical seal

- For centrifugal, rotary, and turbine pumps, compressors, blenders, chillers, and other rotary equipment
- For many water-based applications, such as wastewater treatment, pulp and paper, food processing, marine, and other general applications

Performance Capabilities

Temperature: -40°C to 150°C/
-40°F to 300°F
depending on materials used

Pressure: up to 16 bar g/230 psig

Speed: up to 15 m/s/3000 fpm
(Depending on configuration and shaft size)

Design Features

- Unitised, easy-to-fit design
- Bellows design is pressure supported and eliminates creases or folds
- Compact design fits DIN 24960, ISO 3069, and ANSI B73.1 M-1991
- Positive key drive via drive bands protects bellows from torsional strain

TYPE 2100

Elastomer Bellows Unitised Seal

Type 2100 dimensions - metric

for inch dimensions see notes below

Shaft size (mm)	Size code	A +/- 0.05	C	B	D min	E	F min	L1 S +/. 1.5	L1 K +/. 1.5	L2	L3	L4	L7	Seat available BS	Seat available M
10.00	**0100**	10.00	17.00	21.00	22.00	20.00	15.00	15.00	27.50	5.00	5.50	1.50	na	na	**a**
12.00	**0120**	12.00	19.00	23.00	24.00	22.00	17.00	15.00	26.50	6.00	5.50	1.50	6.80	**a**	**a**
14.00	**0140**	14.00	21.00	25.00	26.00	24.00	19.00	15.00	29.00	6.00	5.50	1.50	6.80	**a**	**a**
15.00	**0150**	15.00	22.00	26.00	27.00	25.00	20.00	15.00	29.00	6.00	5.50	1.50	6.80	**a**	**a**
16.00	**0160**	16.00	23.00	27.00	28.00	26.00	21.00	15.00	29.00	6.00	5.50	1.50	6.80	**a**	**a**
18.00	**0180**	18.00	27.00	33.00	34.00	32.00	25.00	20.00	31.50	6.00	7.00	2.00	7.00	**a**	**a**
20.00	**0200**	20.00	29.00	35.00	36.00	34.00	27.00	20.00	31.50	6.00	7.00	2.00	7.00	**a**	**a**
22.00	**0220**	22.00	31.00	37.00	38.00	36.00	29.00	20.00	31.50	6.00	7.00	2.00	7.00	**a**	**a**
24.00	**0240**	24.00	33.00	39.00	40.00	38.00	31.00	20.00	34.00	6.00	7.00	2.00	7.00	**a**	**a**
25.00	**0250**	25.00	34.00	40.00	41.00	39.00	32.00	20.00	34.00	6.00	7.00	2.00	7.00	**a**	**a**
28.00	**0280**	28.00	37.00	43.00	44.00	42.00	35.00	26.00	36.50	6.00	7.00	2.00	7.00	**a**	**a**
30.00	**0300**	30.00	39.00	45.00	46.00	44.00	37.00	26.00	35.50	7.00	7.00	2.00	8.00	**a**	**a**
32.00	**0320**	32.00	42.00	48.00	48.00	46.00	39.00	26.00	35.50	7.00	7.00	2.00	8.00	**a**	**a**
33.00	**0330**	33.00	42.00	48.00	49.00	47.00	40.00	26.00	35.50	7.00	7.00	2.00	8.00	**a**	**a**
35.00	**0350**	35.00	44.00	50.00	51.00	49.00	42.00	26.00	34.50	8.00	7.00	2.00	9.00	**a**	**a**
38.00	**0380**	38.00	49.00	56.00	58.00	54.00	46.00	30.00	37.00	8.00	8.00	2.00	9.00	**a**	**a**
40.00	**0400**	40.00	51.00	58.00	60.00	56.00	48.00	30.00	37.00	8.00	8.00	2.00	9.00	**a**	**a**
43.00	**0430**	43.00	54.00	61.00	63.00	59.00	51.00	30.00	37.00	8.00	8.00	2.00	9.00	**a**	**a**
45.00	**0450**	45.00	56.00	63.00	65.00	61.00	53.00	30.00	37.00	8.00	8.00	2.00	9.00	**a**	**a**
48.00	**0480**	48.00	59.00	66.00	68.00	64.00	56.00	30.00	35.00	10.00	8.00	2.00	11.00	**a**	**a**
50.00	**0500**	50.00	62.00	70.00	70.00	66.00	58.00	30.00	37.50	10.00	8.50	2.50	11.00	**a**	**a**
53.00	**0530**	53.00	65.00	73.00	73.00	69.00	61.00	30.00	37.50	10.00	8.50	2.50	11.00	**a**	**a**
55.00	**0550**	55.00	67.00	75.00	75.00	71.00	63.00	30.00	37.50	10.00	8.50	2.50	11.00	**a**	**a**
60.00	**0600**	60.00	72.00	80.00	85.00	80.00	70.00	33.00	40.50	12.00	8.50	2.50	12.70	**a**	**a**
63.00	**0630**	63.00	75.00	83.00	88.00	83.00	73.00	33.00	40.50	12.00	8.50	2.50	12.70	**a**	na
65.00	**0650**	65.00	77.00	85.00	90.00	85.00	75.00	33.00	40.50	12.00	8.50	2.50	12.70	**a**	**a**
70.00	**0700**	70.00	83.00	92.00	95.00	90.00	80.00	33.00	48.00	12.00	9.50	2.50	12.70	**a**	na
75.00 *	**0750**	75.00	88.00	97.00	104.00	99.00	87.00	40.00	48.00	12.00	9.50	2.50	12.70	**a**	na

* for sizes over 75mm please use type 21 or contact John Crane

Type 2100 with M mating ring

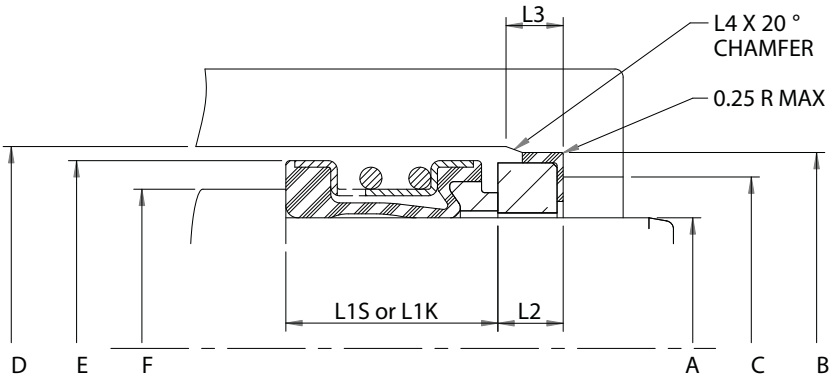

alternative BS mating ring

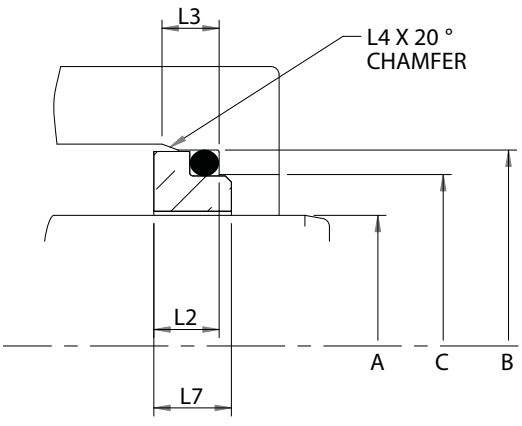

For inch sizes please see type 2106 for sizes up to & including 1.000"
For inch sizes from 1.125" please see type 21 datasheet

TYPE 2100

Elastomer Bellows Unitised Seal

Basic Pressure Ratings

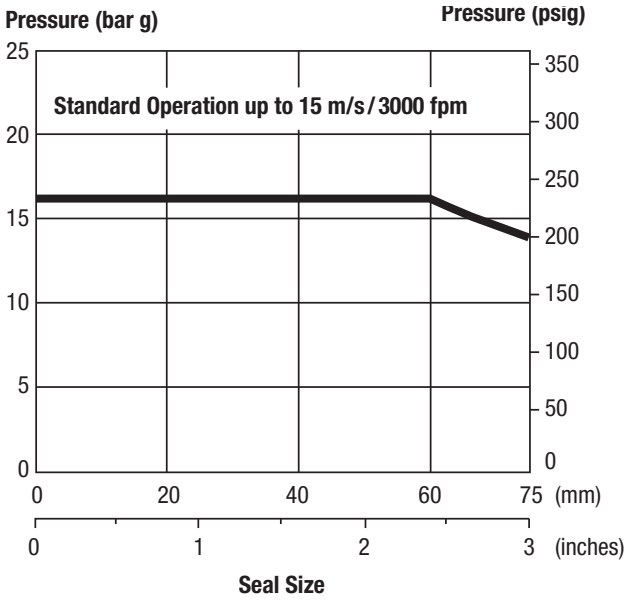

The Basic Pressure Rating is for a standard seal, as shown in the typical arrangement, when installed according to the criteria given in this data sheet and generally accepted industrial practices.

The Basic Pressure Rating assumes stable operation at 3600 rpm in a clean, cool, lubricating, non-volatile liquid with an adequate flush rate. When used with the Multiplier Factors, the Basic Pressure Rating can be adjusted to provide a conservative estimate of the dynamic pressure rating.

For process services outside this range, or a more accurate assessment of the dynamic pressure rating, contact John Crane for more information.

Multiplier Factors

	Selection Considerations	Multiplier Factor
Sealed Fluid Lubricity	Petrol/Gasoline, Kerosene, or Better	x 1.00
	Water and Aqueous Solutions†	*
	Flashing Hydrocarbons††	x 0.60
Face/Primary Ring & Seat/Mating Ring Materials	Carbon vs. Tungsten Carbide or Silicon Carbide	x 1.00
	Silicon Carbide vs. Silicon Carbide	x 0.75
	Carbon Graphite vs. Aluminum Oxide Ceramic	x 0.60
Sealed Fluid Temperature (for carbon only)	Up to 80˚C/175˚F	x 1.00
	From 80˚C to 120˚C/175˚F to 250˚F	x 0.90
	From 120˚C to 150˚C/250˚F to 300˚F	x 0.80

* For water duties, the temperature for fluorocarbon should not exceed 135˚C/275˚F; for water/steam duties, the ethylene propylene limit is 150˚C/300˚F.

† See Multiplier Factors for Water and Aqueous Solutions Graph.

†† The ratio of sealed pressure to vapor pressure must be greater than 1.5, otherwise consult John Crane. If the specific gravity is less than 0.60, consult John Crane.

Example for Determining Pressure Rating Limits:

Seal: 50.8mm/2" Diameter Type 2100

Product: Petrol/Gasoline

Face Materials: Carbon Graphite vs. Aluminum Oxide Ceramic

Operating Temperature: 65˚C/150˚F

Operating Speed: 1800 rpm

Using the Basic Pressure Rating Limits graph, the maximum pressure would be 16 bar g/230 psig.

From the Multiplier Factors chart, apply the multiplier factors for the specific service requirements to determine the maximum operating pressure for the application:

16 bar g/230 psig x 1.00 x 0.60 x 1.00 = 9.6 bar g/138 psig

The maximum operating pressure for this 50.8mm/2" Type 2100 seal is 9.6 bar g/138 psig.

TYPE 2100

Elastomer Bellows Unitised Seal

Multiplier Factors for Water and Aqueous Solutions

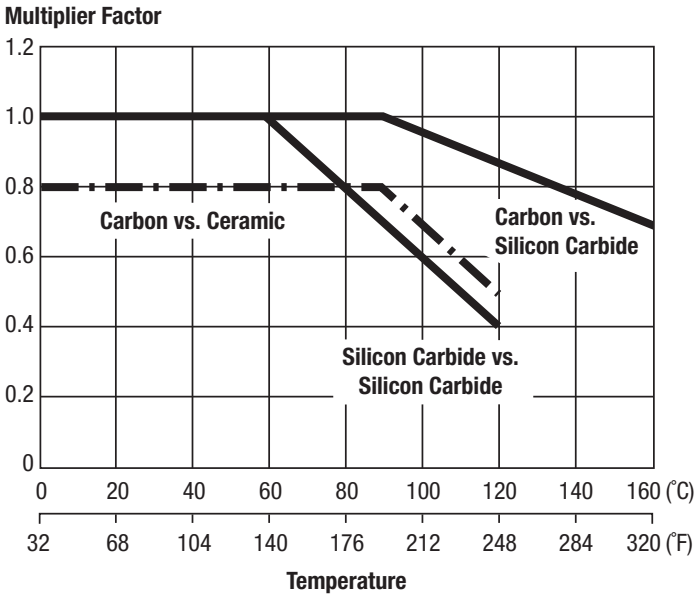

Example for Determining Pressure Rating Limits:

Seal: 75mm/3" Diameter Type 2100

Product: Water

Face Materials: Silicon Carbide vs. Silicon Carbide

Operating Temperature: 100°C/212°F

Operating Speed: 3600 rpm

Using the Pressure Rating Limits graph, the maximum pressure would be 14 bar g/203 psig.

From the Multiplier Factors for Water and Aqueous Solutions chart, apply the multiplier factors for the specific service requirements to determine the maximum operating pressure for the application:

14 bar g/203 psig x 0.60 = 8.4 bar g/122 psig

The maximum operating pressure for this 75mm/3" Type 2100 seal is 8.4 bar g/122 psig.

Materials of Construction

SEAL COMPONENTS	MATERIALS	
Description	**Standard**	**Options**
Face/Primary Ring	Resin-Impregnated Carbon Graphite Sintered Silicon Carbide	Antimony-Loaded Carbon Graphite
Bellows	Nitrile/Buna-N Ethylene Propylene	Fluorocarbon
Drive Bands and Spring	316 Stainless Steel	–

For your nearest John Crane facility, please contact one of the locations below.

Europe
Slough, UK
Tel: +44-1753-224000
Fax: +44-1753-224224

North America
Morton Grove
Tel: +1-847-967-2400
Fax: +1-847-967-3915

Latin America
São Paulo, Brazil
Tel: +55-11-3371-2500
Fax: +55-11-3371-2599

Middle East & Africa
Dubai, United Arab Emirates
Tel: +971-488-39510
Fax: +971-488-37766

Asia Pacific
Singapore
Tel: +65-6512-5200
Fax: +65-6512-5233

If the products featured will be used in a potentially dangerous and/or hazardous process, your John Crane representative should be consulted prior to their selection and use. In the interest of continuous development, John Crane Companies reserve the right to alter designs and specifications without prior notice. ISO 9001, ISO 14001, ISO/TS 16949 Certified. Details available on request.

smiths
bringing technology to life

©2008 John Crane Print 06/08 www.johncrane.com