Heavy Duty Mechanical Seal for Slurry Processing Industries

Type 5860 Slurry Seal

Designed Specifically for Slurry Pumps and Equipment

Type 5860 Slurry Seal

Heavy Duty Mechanical Seals

Technology

The Type 5860 heavy duty cartridge slurry seal is available as a single or double seal. It is designed to thrive in the harshest abrasive slurry environments. Process fluids such as ores, limestone, phosphates, kaolin clay, drilling mud, lime mud, coarse coal, boiler fly ash, rock salt, sludge, sand and gravel are no problem for the Type 5860.

Optimized together with slurry pump and mixer designs to meet your requirement for:

- Environmental Control
- Longest Operating Life
- Fault Free Installation
- Lowest Operating Cost

Courtesy of Weir Group PLC

Unique Design

Unique design features eliminate problems common to sealing slurry process fluids:

- Vortex Formation
- Excessive Face Wear
- Product Side Hang-up
- Erosion and Drive Mechanism Wear
- Atmosphere Build-up of Solids
- Lack of Flush Water Seal Support

Computer optimized seal faces are designed to provide maximum stability with minimum heat generation under adverse conditions expected when pumping heavy slurries.

New advanced silicon carbide is a controlled density material designed specifically for optimum performance with maximum seal face life and lubrication; proven to out-perform conventional carbide materials.

Applications

John Crane Type 5860 Slurry Seals are rugged in construction, designed specifically for use in heavy duty slurry pumps, mixers and other rotating equipment throughout slurry processing industries:

- Ore Recovery
- Flue Gas Desulfurization (FGD)
- Phosphate Slurry
- Tailings Disposal
- Coal Slurry Transportation
- Wet Cement Processing
- Bauxite & Iron Ore Slurries
- Sand & Gravel
- Dewatering Systems
- Effluent Transport
- Waste Sludge Removal

Engineered to be the Performance Leader for Slurry Processing Industries

Advanced Seal Face Design
- Utilizing materials for optimum performance in slurry applications.

Anti-Rotation Pin with O-Ring
- Protects seal faces from drive slot damage.

Heavy Duty Drive Clamp
- Positive location even on hardened pump sleeves.
- High axial loads allowed.

Unique Quench Adapter
- Intermittent or continuous quenching.
- Provides longer life span.
- Removes solids build-up.

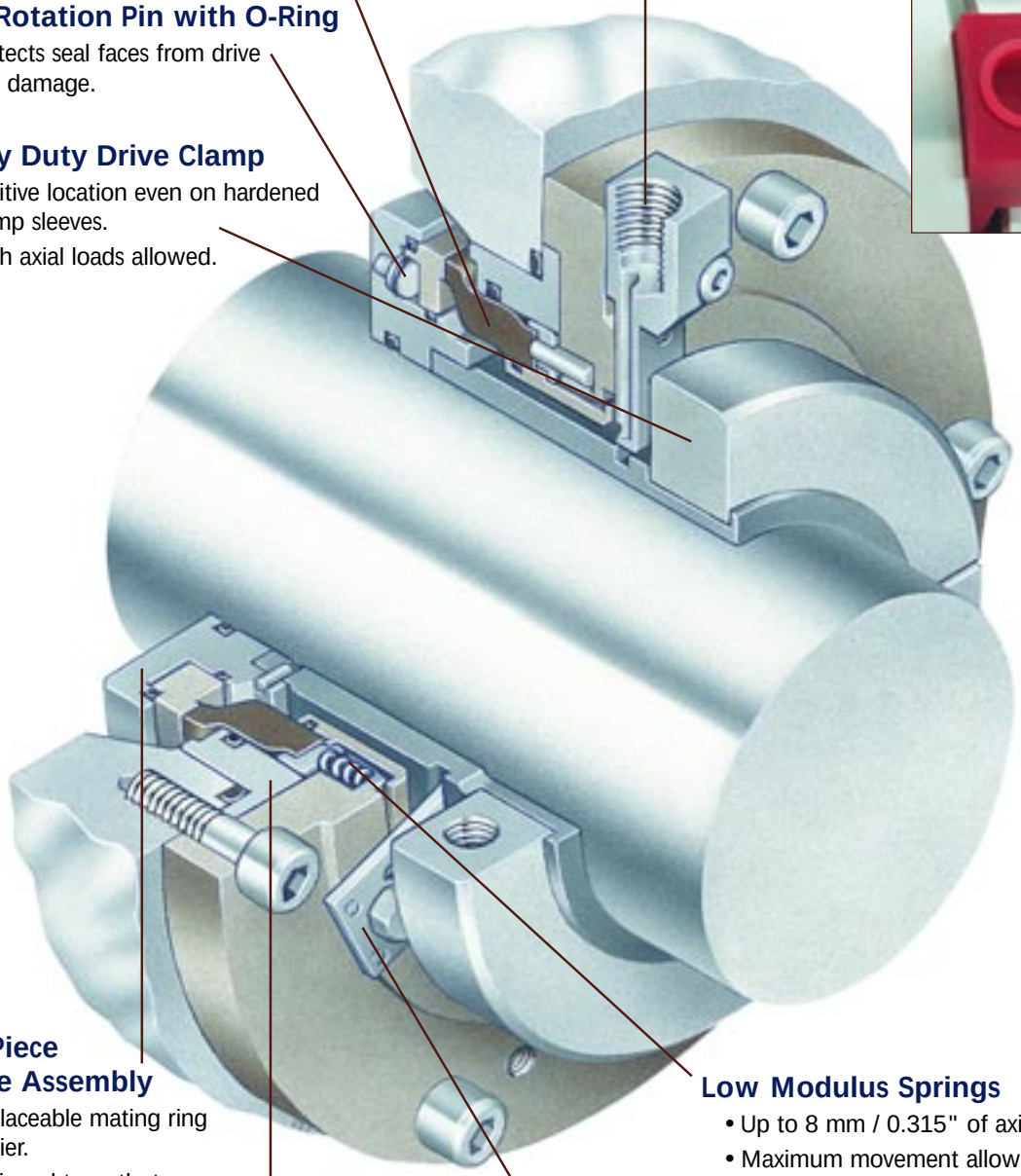

Two Piece Sleeve Assembly
- Replaceable mating ring carrier.
- Designed to outlast pump's wetted parts.
- High erosion / corrosion resistant materials.

Two Piece Gland Assembly
- Replaceable wear plate.
- Allows for economic reconditioning.
- High erosion / corrosion resistant materials.

Low Modulus Springs
- Up to 8 mm / 0.315" of axial tolerance.
- Maximum movement allowance.
- Protected from the product.

Setting Spacers
- Self centering.
- Independently position the seal both axially and radially.
- Not reliant on pump components.

Type 5860 Heavy Duty Slurry Seal

Performance Capabilities

Pressure	Up to 435 psig / 30 bar g
Temperature	Up to 180°F / 80°C or 400°F / 200°C with water quench
Speed	Up to 4000 fpm / 20 m/s
Duty	Slurry / Abrasive services up to 60% by weight
Seal Size Range	1.125" to 9.250" / 28mm to 235mm

Call your local John Crane branch for duties outside the standard parameters.

Single Seal

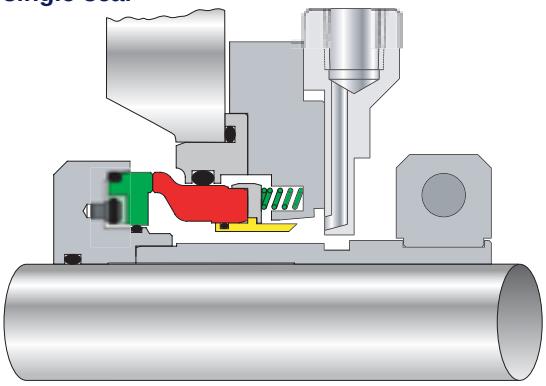

Double Seal

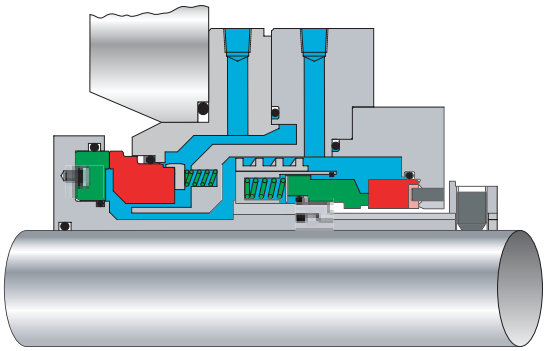

Materials of Construction

Component	Standard	*Optional*
Primary Ring	Silicon Carbide	—
Mating Ring	Silicon Carbide	—
Sleeve Assembly	Duplex Stainless Steel/ 316 Stainless Steel	*Alloy C-276 / 316 SS* *CD4MCu Duplex SS / 316 SS*
Gland Assembly	Duplex Stainless Steel/ 316 Stainless Steel	*Alloy C-276 / 316 SS* *CD4MCu Duplex SS / 316 SS*
Drive Clamp Spacer Disc Assembly	316 Stainless Steel	—
Springs	Alloy C-276	—
O-Rings	Fluoroelastomer	*Ethylene Propylene, Nitrile,* *Perfluoroelastomer, TFE Elastomer*
Deflector	Acetal	—

Setting The Slurry Sealing Standard

Features	Benefits
Advanced Seal Face Design	Utilizing special materials for optimum performance in harsh slurry environments.
Product Protected Low-Modulus Springs	Provides maximum movement allowance.
Two Piece Gland and Sleeve Assemblies	With replaceable wetted / wear parts made of high erosion / corrosion resistant material designed to outlast the pump's wetted parts.
Anti-Rotation Pin with O-Rings	Protects seal faces from drive slot damage.
Flushless Operation	Typical flush water seal support is not required since seal lubrication and cooling are supplied from the pumped fluid in most applications.
Internal / External Mounting	Design variants allow the seal to be fitted to the equipment either from the process side (Internal Mount) or from the atmospheric side (External Mount) for ease of installation or space limitation considerations.

Unique Axial Shaft Movement Tolerance Range

Axial Shaft movement allowance of up to 8mm / 0.315"compensates for:

- Pump Build Tolerances.
- Bearing Movement.
- Wear/Reconditioning Allowance.
- Shock Movements.

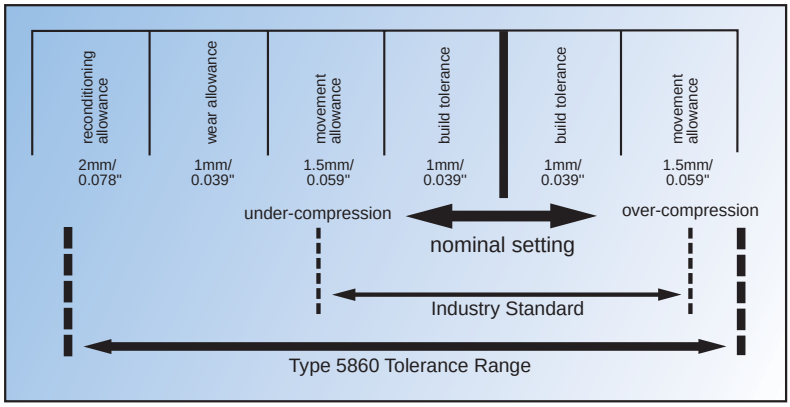

Complete On-Site Maintenance

The John Crane Type 5860 Series of heavy duty slurry mechanical seals has been developed in conjunction with global slurry pump and rotating equipment manufacturers and supported by our stock-holding warehouses and seal repair facilities in virtually all major industrial areas around the world.

Quench Option

For single seals utilizing a continuous water quench, or for a double seal's barrier water, a John Crane Safeunit® can optimize and control the water usage.

Europe
Slough, UK
Tel: 44-1753-224000
Fax: 44-1753-224224

Latin America
São Paulo, Brazil
Tel: 55-11-3371-2500
Fax: 55-11-3371-2599

Middle East, Africa, Asia
Dubai, United Arab Emirates
Tel: 971-4-3438940
Fax: 971-4-3438970

North America
Morton Grove, Illinois USA
1-800-SEALING
Tel: 1-847-967-2400
Fax: 1-847-967-3915

smiths
A part of Smiths Group plc

For your nearest John Crane facility, please contact one of the locations above.

If the products featured will be used in a potentially dangerous and/or hazardous process, your John Crane representative should be consulted prior to their selection and use. In the interest of continuous development, John Crane Companies reserve the right to alter designs and specifications without prior notice. It is dangerous to smoke while handling products made from PTFE. Old and new PTFE products must not be incinerated.

©2002 John Crane Inc. Print 11/02