TSC

METASTREAM® T Series Couplings

A – Stainless Steel Flexible Discs
B – Overload Collars
C – Cartridge Transmission Unit
D – Anti-Fly Feature
E – Anti-Corrosion Treatment
F – Hubs with Puller Holes
G – Externally Wrenched Bolts
H – Large Shaft Diameters accommodated
J – Jacking Bolt Feature

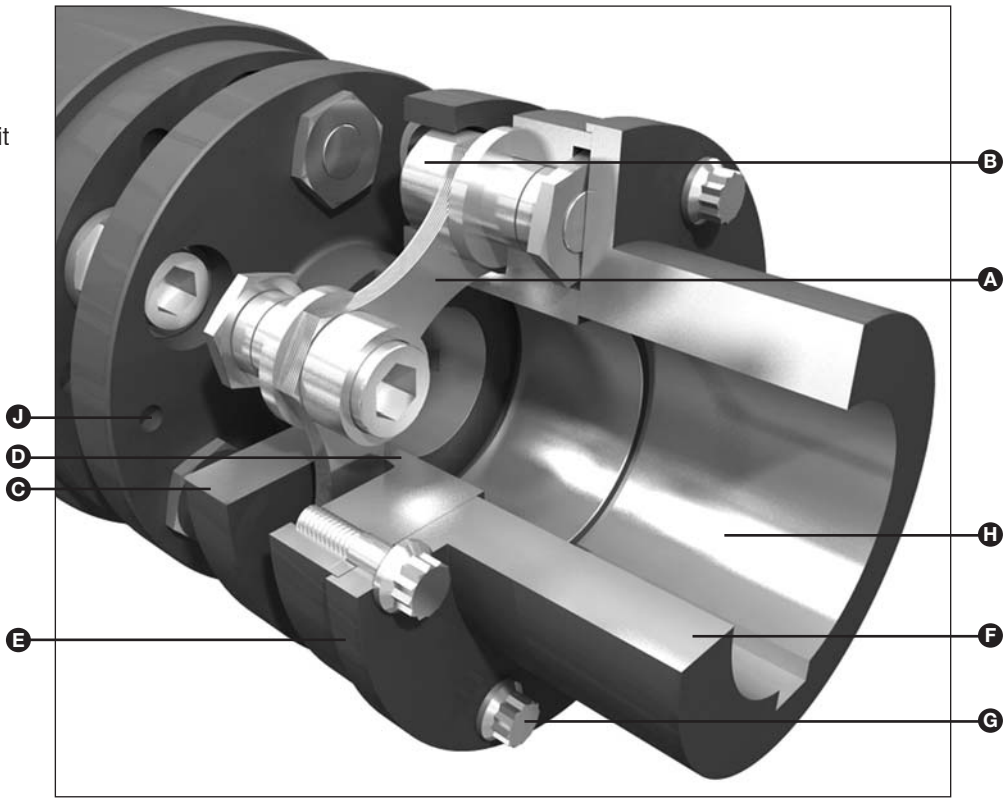

Product Description

Metastream® T Series Couplings incorporate scalloped, stainless steel, flexible discs. This design gives the most flexible solution for high torque and misalignment conditions. This range of couplings has been specifically designed to meet the exacting standards of API 610, to all its editions.

The coupling comes as a cartridge design to maximize reliability, while also making it very easy to fit on site. This concept ensures the high level of integral balance is maintained when the coupling is installed.

The coupling incorporates many features listed as standard, to ensure safe and trouble free operation, giving the user that fit and forget reliability expected of all Metastream products.

- Easy to fit
- Meets API 610 (all editions). Can be supplied to API 671, if required
- Intrinsic balance exceeds AGMA class 9
- Ideally suited to pump applications, electric motor and turbine drives in critical process industry, marine and power generation applications
- Coated carbon steel for corrosion protection
- Choice of hub configuration to suit shaft diameters
- ATEX compliant

Design Features

Fit and Forget: The T Series coupling is designed for infinite life, and with correct machinery alignment will out last the machines it connects.

Overload Protection: The coupling is fitted with overload collars to prevent flexible disc rupture in the event of severe torsional overload.

Anti-Fly Retention: The spacer is retained by specially designed anti-fly guard rings to ensure safe operation, even in the unlikely event of flexible disc and bolt failure.

Low Imposed Loads: The flexible discs have been designed to optimize their torque capability, while minimizing the reaction forces due to misalignment, thus maximizing the life of the machines connected.

Zero Maintenance: The coupling has no relative moving parts, and hence requires no lubrication or routine maintenance.

Standards Features: The coupling hubs are fitted with puller holes as standard. Self locking feature ensure the hub bolts remain in place under all vibration conditions. Compression and jacking features ease assembly and removal.

No Backlash: The coupling design, with fitted bolts, and torsionally stiff flexible discs ensures there is zero backlash. This makes the coupling ideal for drives where constant speed is crucial.

TSC

METASTREAM® T Series Couplings

TSC Technical Data

Coupling Size	Rating HP/100 rpm	Max. Continuous Torque lb. in.	Peak Overload Torque lb. in.	Max. rpm	Weight - Transmission Unit (lb.) Minimum DBSE	Weight - Transmission Unit (lb.) Per Inch Extra DBSE	Weight - Unbored Hub (lb.) Standard	Weight - Unbored Hub (lb.) Large	Weight - Unbored Hub (lb.) Long
0013	1.7	1,068	2,670	25,500	3.0	0.2	1.9	4.0	-
0033	4.4	2,770	6,920	20,000	5.9	0.3	3.4	6.7	-
0075	10.0	6,300	15,750	16,500	11.2	0.4	7.5	12.6	8.2
0135	18.0	11,340	28,350	14,400	19.5	0.6	12.2	19.4	14.8
0230	31.0	19,520	48,800	12,000	28.1	0.7	19.4	30.6	24.4
0350	47.0	29,600	74,000	10,500	35.2	0.7	35.9	-	41.4
0500	67.0	42,200	105,000	9,500	44.2	0.9	46.2	-	57.6
0740	99.0	62,360	155,900	8,000	55.9	1.1	66.4	-	81.9
0930	125.0	78,740	196,850	7,000	71.7	1.3	85.0	-	110.7
1400	188.0	118,440	296,100	6,000	101.6	1.8	115.7	-	159.5

Note that for the complete coupling, weights of two appropriate hubs plus a transmission unit are required.

Hubs will be supplied unbored unless specified. Consult your local sales office regarding standard bore and keyway tolerances.

TSC Typical Arrangement

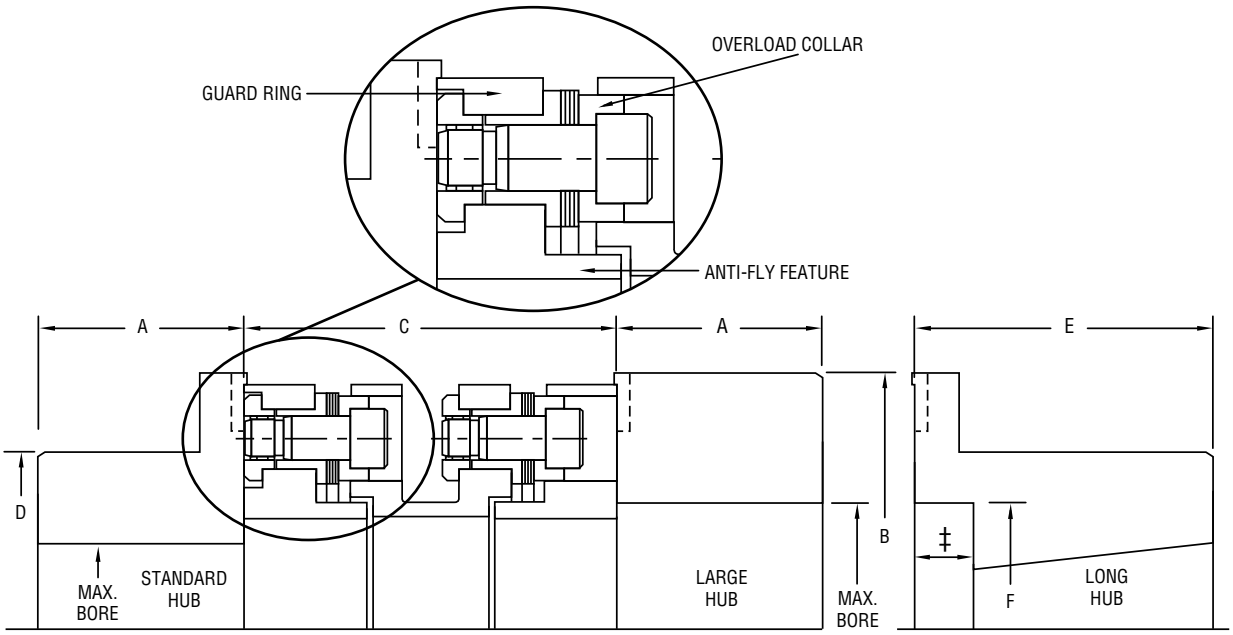

‡ To Suit Specific Applications

TSC Dimensional Data (inches)

Coupling Size	A	B	C Distance Between Shaft Ends Min.	C Distance Between Shaft Ends Stocked[1]	D	E	F Max.	MAXIMUM BORES Standard Hub[2]	MAXIMUM BORES Large Hub[2]	MAXIMUM BORES Long Hub[3]
0013	1.57	3.39	2.50	3.5, 4.375, 5.0, 7.0	2.13	-	-	1.562	2.062	-
0033	1.77	4.13	3.00	3.5, 4.375, 5.0, 7.0	2.72	-	-	1.875	2.750	-
0075	2.16	5.12	3.68	4.375, 5.0, 7.0	3.54	2.44	3.12	2.312	3.500	2.250
0135	2.44	5.98	4.56	5.0, 7.0	4.41	3.03	4.00	3.000	4.438	2.875
0230	2.76	7.05	4.81	7.0	5.16	3.59	4.75	3.438	5.188	3.375
0350	3.59	8.04	5.06	7.0	6.42	4.19	6.00	4.500	-	4.375
0500	3.74	9.02	5.12	7.0	7.13	4.75	6.62	5.000	-	4.625
0740	4.25	10.00	5.29	8.0	8.11	5.31	7.56	5.625	-	5.500
0930	4.53	10.99	5.66	9.0	8.78	6.03	8.12	6.188	-	5.750
1400	5.12	11.97	6.47	10.0	9.76	7.19	9.00	6.938	-	6.500

All dimensions in inches, and should not be used for construction. Certified dimensions furnished upon request.

NOTES: (1) These Distance Between Shaft End (DBSE) sizes are stocked. Other lengths to suit specific shaft separations are available.

(2) Maximum bores shown are based on standard AGMA square key dimensions.

(3) Accommodates NEMA standards for taper bores.

TSC

METASTREAM® T Series Couplings

Selection Procedure

1. Select appropriate service factor SF from table.
2. Calculate coupling rating from
   $R = \frac{HP \times 100 \times SF}{N}$
   where:
   HP = driver rated power (horsepower)
   N = speed (rev./min.)
3. Select a coupling with the same or higher rating.
4. Check that the hub bore capacity is suitable.
5. Check peak torque capability is suitable for application.
6. Check speed capability.
7. Check whether additional dynamic balancing is required.
8. Specify Distance Between Shaft Ends (DBSE).

Example: 150 HP electric motor to centrifugal pump at 3600 rpm.

$R = \frac{150 \times 100 \times 1}{3600}$

R = 4.17 HP per 100 rpm

Selection: TSC - 0033

Standard hub bore up to 1.875"
Large hub bore up to 2.75"
Peak torque capability: 6920 lb.-in.

Additional dynamic balancing should not be required.

Service Factor SF

Suggested service factors for electric motor, steam turbine, and gas turbine drivers are given below.

Torque Variation		Service Factor
Constant Torque	Centrifugal Pump Centrifugal Compressor Axial Compressor Centrifugal Blower	1.0*
Slight Torque Fluctuation	Screw Compressor Gear, Lobe and Vane Pumps Forced Draft Fan Medium Duty Mixer Lobe Blower	1.5
Substantial Torque Fluctuations	Reciprocating Pumps Heavy Duty Mixers Induced Draft Fans	2.0

*Use a minimum service factor of 1.25 on electric motor drives through a gearbox.

The examples given are for typical machines and are empirically based guidelines. Knowledge of actual torque characteristics may indicate a different service factor. Consult John Crane for advice.

KSelect is an internet based selection program for the TSC. This selection program provides all necessary technical data including inertias and torsional stiffness.
Visit www.metastreamcouplings.com

Available Options

- Spark-resistant couplings for hazardous zone operation.
- Special materials for low temperature applications and/or higher corrosion resistance.
- Electrical insulation.
- Torque limiting and shear pin designs.

Consult John Crane for any other special requirements. Metastream couplings can be adapted to suit virtually all power transmission coupling needs.

TSC

METASTREAM® T Series Couplings

Coupling Alignment

Correct installation and alignment of couplings is essential for reliable machinery performance.

The angular and axial restoring forces in the table below are given at maximum deflections. The chart can be used to determine forces across the full deflection range. The nonlinear characteristics can detune a system to prevent high amplitude axial vibration.

John Crane supplies a variety of shaft alignment equipment and offers alignment training courses. **Lase-A-Lign Ex** is one of the toughest and most robust measurement and alignment systems available. For alignment work in potentially explosive environments, equipment needs to be explosion-protected. **Lase-A-Lign Ex** complies with the latest ATEX standards for work in such environments.

TSC MISALIGNMENT

Coupling Size	Max. Axial Misalignment(4) +/– in.	Max. Axial Misalignment(4) Equivalent Thrust-lb.	Max. Parallel Misalignment(5) in.	Max. Parallel Misalignment(5) Restoring Moment lb.-in.
0013	±0.040	47	0.020	36
0033	±0.050	63	0.020	54
0075	±0.060	81	0.022	78
0135	±0.080	126	0.024	104
0230	±0.100	166	0.040	130
0350	±0.110	175	0.040	300
0500	±0.130	243	0.040	360
0740	±0.150	286	0.048	420
0930	±0.170	331	0.055	480
1400	±0.200	608	0.060	540

NOTES: (4) Meets NEMA end float specifications without modification.

(5) Values based on angular deflection of 1/2° per end and minimum stock DBSE. Greater misalignment accommodation is possible by increasing dimension C.

FORCE VS. DEFLECTION

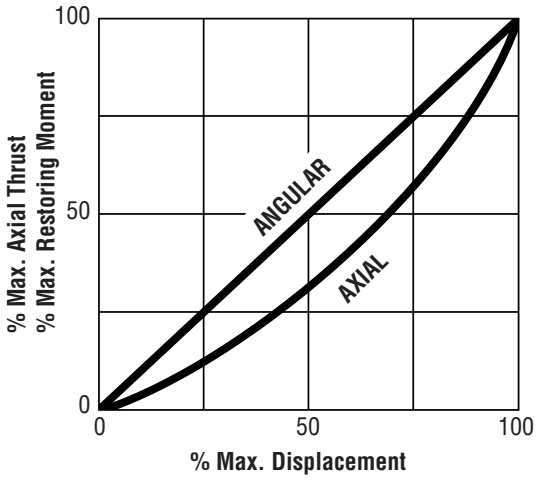

Balance Recommendations

The chart illustrates the relationship between the TSC sizes and their operating speeds to meet AGMA class 9, which is appropriate for most applications.

The inherent balance of the TSC range meets AGMA standard 9000-C90 class 9. Use this chart as a general guide to determine if dynamic balance improvement is required.

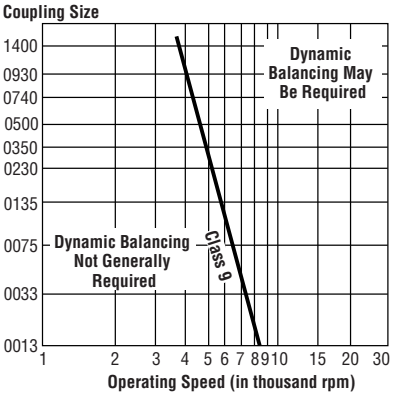

For your nearest John Crane facility, please contact one of the locations below.

Europe
Slough, UK
Tel: +44-1753-224000
Fax: +44-1753-224224

North America
Houston
Tel: +1-713-944-6690
Fax: +1-713-946-8252

Latin America
São Paulo, Brazil
Tel: +55-11-3371-2500
Fax: +55-11-3371-2599

Middle East & Africa
Dubai, United Arab Emirates
Tel: +971-488-39510
Fax: +971-488-37766

Asia Pacific
Singapore
Tel: +65-6512-5200
Fax: +65-6512-5233

If the products featured will be used in a potentially dangerous and/or hazardous process, your John Crane representative should be consulted prior to their selection and use. In the interest of continuous development, John Crane Companies reserve the right to alter designs and specifications without prior notice. ISO 9001, ISO 14001, ISO/TS 16949 Certified. Details available on request.

smiths
bringing technology to life

©2008 John Crane Print 05/08 www.metastreamcouplings.com S-TSC/Eng