John Crane

TURBOMACHINERY

Turbomachinery Solutions

smiths
bringing technology to life

THE QUEEN'S AWARDS
FOR ENTERPRISE:
INTERNATIONAL TRADE
2006

A global leader in turbomachinery solutions

John Crane is a leading global supplier of engineered sealing technology, with an enviable reputation for sealing solutions that provide the end-user with outstanding operational reliability and significantly reduced cost of ownership. The company offers a comprehensive range of mechanical seals, mechanical packings and sealing support systems, complemented by a wide variety of power transmission couplings.

- An annual global turnover in excess of £500 Million ($900 Million)
- A global network of 20 main manufacturing sites
- A constantly expanding network in over 50 countries
- Over 6000 employees worldwide, including 1100 sales and service engineers

Your partner in productivity

John Crane Turbomachinery Solutions - service, technology and knowledge that our customers rely on

- Registered the first gas seal industry patent using spiral groove technology in1968
- Completed over 200,000,000 hours of successful gas seal operation
- Designed both the world's largest and highest pressure operational gas seals
- Seven service centres dedicated to turbomachinery
- Five international technology test centres
- Over 300 turbomachinery sales and service engineers worldwide

John Crane has over 40 years of gas seal experience on which to draw, and couples this with a unique blend of knowledge and service plus a passion for innovation and technical excellence.

In addition, John Crane has an intimate understanding of the sectors in which its clients operate, and the uses to which its gas sealing solutions are applied. Its products and services are now in widespread use throughout the oil, gas, chemical, power, pipeline and storage industries. Whether dealing with re-injection, refrigeration or recycling duties involving hydrogen, propane, methane or other substances, proven solutions for all applications are available.

A product range that is second-to-none

A policy of constant development allows John Crane to consistently push the boundaries of technology. This approach is combined with an ever-expanding range of proven products enabling John Crane to offer customers unrivalled product reliability backed by a wealth of experience and specialist knowledge.

28XP Dry gas compressor seal

The 28XP offers all the features and benefits of the 28AT, but optimised to provide reliable performance on higher pressure duties. The 28XP's increased chemical resistance and ability to operate over a wider temperature range has established it as an industry benchmark for reliability.

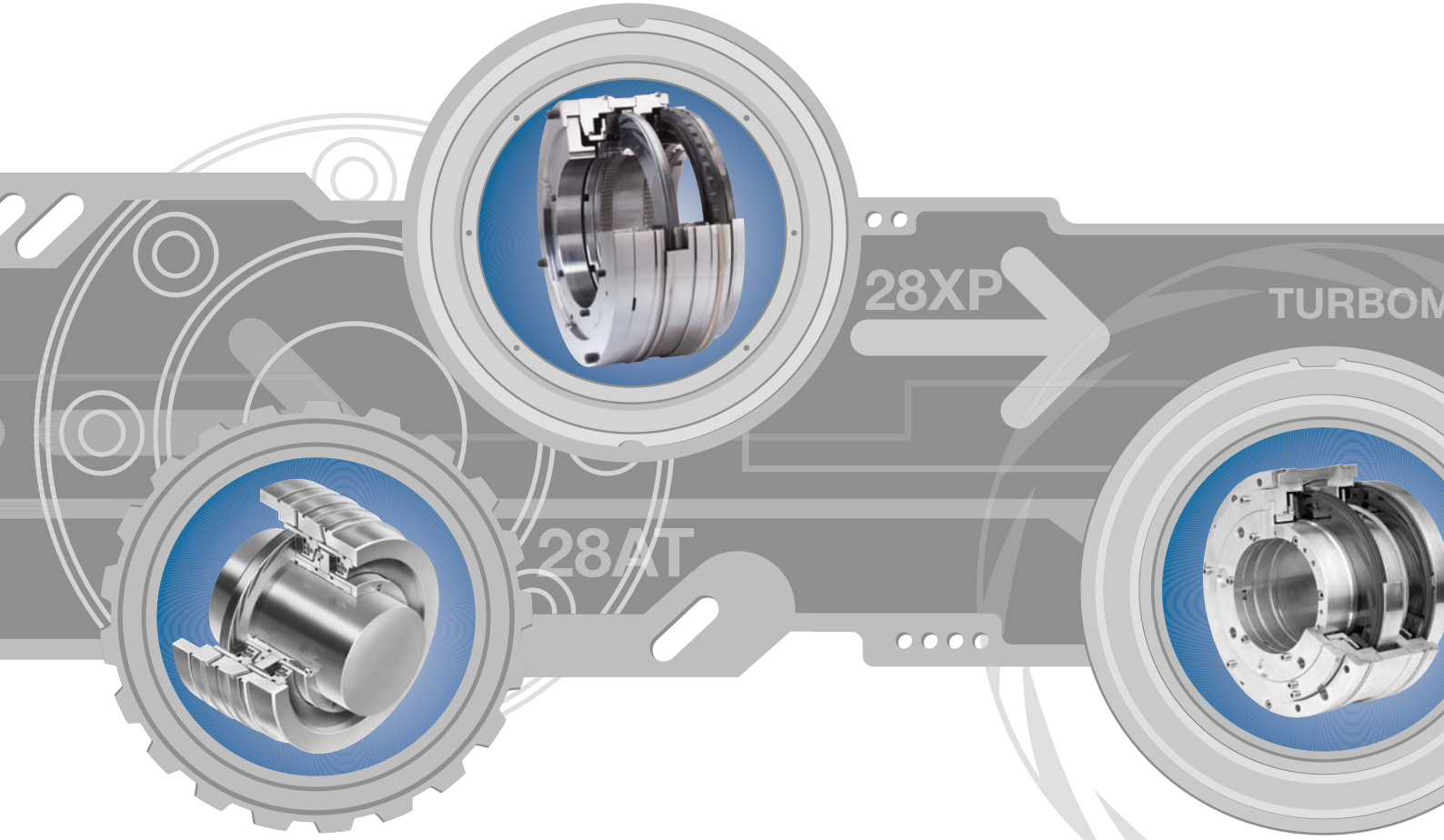

28AT Dry gas compressor seal

Designed to excel in low pressure applications the 28AT is today's most widely used non-contacting, dry running gas seal. Its design pedigree stretches back over 30 years and it has been proven in use on many thousands of installations around the world. The versatility offered by the 28AT makes it ideal for a very wide variety of gas compressor applications.

28EXP Dry gas compressor seal

The 28EXP is John Crane's highly effective solution for sealing gas installations that involve extreme pressures. It has been proven in use in the most challenging and hostile environments, and delivers rugged and reliable performance around the world.

High performance barrier seal

John Crane's compact and self-adjusting barrier seal forms part of a total sealing system that provides a reliable barrier against the migration of bearing oil into the dry gas seal cartridge.

METASTREAM™

Metastream couplings

John Crane's Metastream high performance power transmission couplings are widely regarded as an industry standard in the turbomachinery market. They are optimised to satisfy the rigorous demands of critical high-speed applications, while still providing a low weight-to-power transmission capability without compromising safety or reliability.

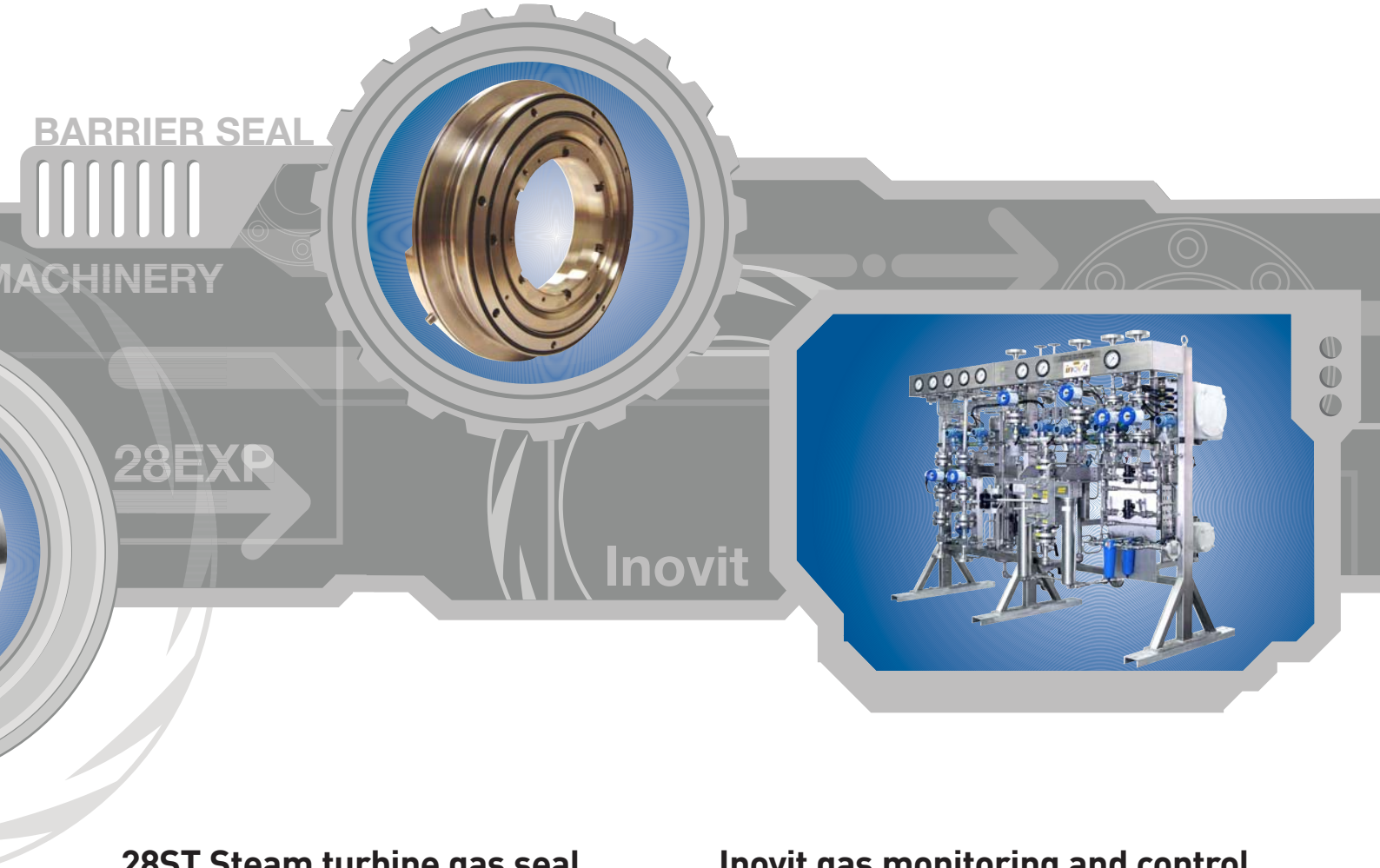

28ST Steam turbine gas seal

The non-contacting, steam lubricated Type 28ST is an effective sealing solution for small to medium sized general steam turbine applications. By combining proven rotating groove technology with a high temperature capability that virtually eliminates leakage of steam along the shaft, it creates an excellent alternative to traditional sealing devices such as segmented carbon bushes and labyrinths.

Inovit gas monitoring and control systems

John Crane's expertise in the design, production and installation of seals themselves is matched by the company's ability to provide a comprehensive array of the gas seal support, monitoring and control systems which often form the heart of any sealing arrangement. John Crane can design and install bespoke systems featuring SEPro and Monobloc technology which meet even the most challenging reliability demands and which also help customers comply with all relevant safety and environmental requirements.

Service and customer support

John Crane is firmly committed to providing the type of international customer support that is only available from a genuine market leader. All customers in all sectors can rely on proven and effective support from John Crane.

An ongoing programme of investment means impressive resources are available to provide unparalleled customer support. The world-wide network of service centres feature state-of-the-art reconditioning and testing facilities with dynamic test rigs that accurately reproduce real operating conditions. Combined with John Crane's wealth of product and industry experience, this enables customers to benefit from dedicated service, rapid turnaround times and expert advice.

John Crane adopts a partnership approach to its customers. By remaining flexible, it is able to tailor the support it provides to meet the specific requirements of each customer, whether the aim is to improve productivity and reduce costs by implementing new sealing solutions, or to increase reliability and reduce downtime on existing installations.

Reliability specialists

Dedicated product reliability specialists work to help customers reduce the cost-to-quality ratio of their gas sealing equipment, achieve their own environmental management targets, comply with legislation changes and plan innovative solutions to meet future requirements.

John Crane also offers an extensive retrofitting, conversion and upgrading service which works to help customers meet their own safety, reliability and efficiency standards.

This unparalleled service is also available at a local level, easily accessible through John Crane's international network of facilities. Expert support and advice is never more than a telephone call away.

Advancing technology through innovation

Research and development

John Crane constantly pushes sealing technology to higher levels. An established track record of gas seal development has provided the company with a portfolio of leading-edge analytical tools, bespoke software and unique patented designs dedicated to generating customer benefits. These items are used to help select the most appropriate and effective solution for customers individual applications.

Safe and environmentally compliant

All turbomachinery products are designed with a firm commitment to safety and environmental issues. This allows the company to provide unmatched reliability, unbeatable operator safety (during both normal and upset conditions) and a way of complying with all relevant international environmental standards.

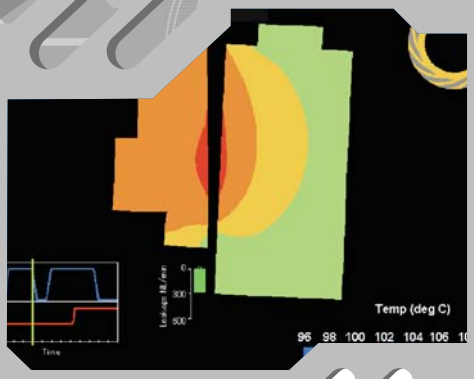

A belief that successful technology uses the most appropriate materials is underlined by John Crane's investment in materials science research. This allows the company to use the most advanced materials to create products with a genuine performance advantage to increase customers reliability and productivity.

Unique advantage

Combining its unrivalled product range with expert knowledge and a genuinely different value-added service capability allows John Crane to make a unique offering to gas seal customers which translates into tangible performance, reliability and financial benefits.

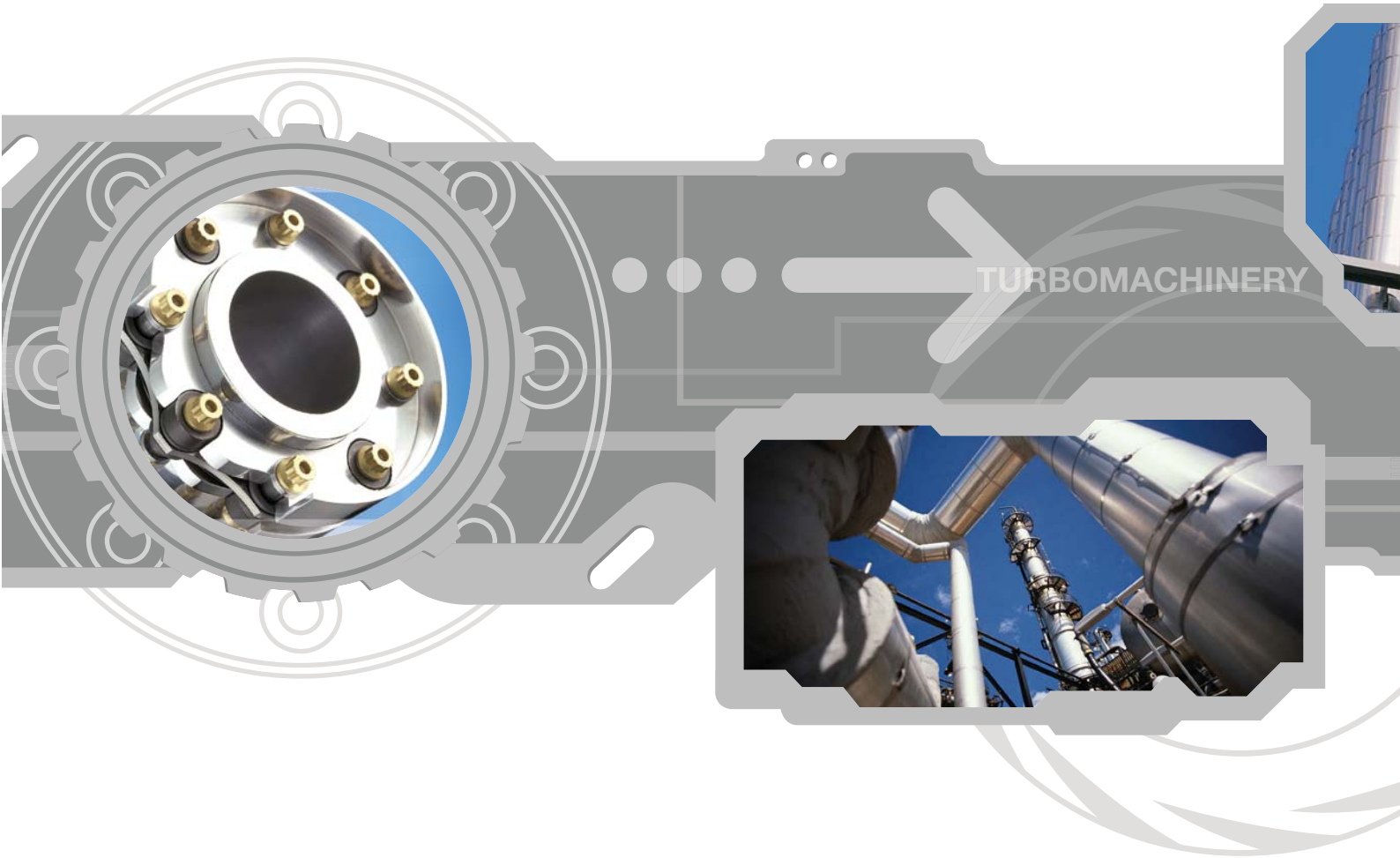

Europe
Slough, UK
Tel: 44-1753-224000
Fax: 44-1753-224224

North America
Morton Grove
Tel: 1-847-967-2400
Fax: 1-847-967-3915

Latin America
São Paulo, Brazil
Tel: 55-11-3371-2500
Fax: 55-11-3371-2599

Middle East & Africa
Dubai, United Arab Emirates
Tel: 971-4-3438940
Fax: 971-4-3438970

Asia
Singapore
Tel: 65-6512-5200
Fax: 65-6512-5233

For your nearest John Crane facility, please contact one of the locations above.

If the products featured will be used in a potentially dangerous and/or hazardous process, your John Crane representative should be consulted prior to their selection and use.
In the interest of continuous development, John Crane Companies reserve the right to alter designs and specifications without prior notice.

©2006 John Crane Print 07/06 **www.johncrane.com** ISO 9001, ISO 14001, ISO/TS 16949 Certified. Details available on request. B-**Gas Seal/Eng**

smiths
bringing technology to life