Mechanical Seals for Sulzer Ahlstar Pumps

SAFEMATIC® SE1, SEW and SE2

Safeseal SE1

Simple design, good technical solutions

Typical applications

Safeseal SE1 is a special seal designed for clean and lubricating fluids such as water, different types of oils, solvents, and stock (consistency ≤ 2%). It is typically used in pumps in paper and board mills as well as in power plants. The SE1 seal is designed especially for the Sulzer APP and APT pump series.

The SE1 seal is easy to install and maintain. In spite of its simple design, SE1 is very advanced in its technical capabilities including, for example, a patented thermal method for seal face holding and an elastic thrust ring.

Features:

1. Balanced design
Undisturbed operation even with sudden pressure shocks.

2. Spring located in the stationary body of the seal
Shaft misalignment does not pump up the spring or wear out the O-ring.

3. SiC/Carbon a standard option for seal faces
SiC/Carbon holds up well under high speeds found in, for example, condensate pumps and other high temperature pumps.

4. Installation against the shaft shoulder
Easy installation reduces risk of human error. No measurements required for installation.

5. No drive pins at seals
Seal face does not crack at start-up.

6. Available in different materials
Selection covers all possible single seal applications.

Safeseal SEW

A reliable, long-lasting seal for demanding conditions

Typical applications

SEW is a seal operating on a non-pressurised water rinsing (quench) principle, and it is designed for the most demanding applications in the pulp industry, where reliable and long-lasting operation is required from a seal. Typical applications include stock pumps at pulp mill washing and screening facilities as well as high temperature condensate pumps. The SEW seal is especially designed for the Sulzer APP and APT pump series.

Features

1. Balanced design
Undisturbed operation even with sudden pressure shocks.

2. Spring located in a stationary body
Shaft misalignment does not pump up the spring or wear out the O-ring.

3. Installation against the shaft shoulder
Easy installation reduces risk of human error. No measurements required for installation.

4. No drive pins at seals
Seal face does not crack at start-up.

5. Available in different materials
Selection covers all possible single seal applications.

6. Non-pressurised seal water rinsing (quench)
Possible to cool seal with non-pressurised seal water at high temperatures.
V-ring prevents water leakage from the seal.

Safeseal SE2

Double-balanced design, ultimate reliability

Typical applications

The double-balanced design of Safeseal SE2 ensures reliable and long-lasting operation under the most demanding conditions. This seal is typically used in pumps for abrasive and environmentally hazardous liquids in cooking, evaporation and causticising facilities in pulp mills. The SE2 seal is especially designed for the Sulzer APP and APT pump series.

Special features

1. Seal faces are fastened by a patented thermal heat shrink method, which ensures correct face alignment at all temperatures recommended for this seal.
2. The springs are located in the stationary body of the seal in the seal water. This allows the seal water to rinse the springs continuously, preventing corrosion by process chemicals. In addition, spring jams decrease. Shaft misalignment does not pump up springs or wear out O-rings.
3. The piston-type design of the seal enables free axial movement, therefore axial movement does not have any impact on seal face loading.
4. Even in standard models, PTFE slot rings in positions where they are exposed to the product have replaced traditional O-rings. The PTFE seal advantage is that it does not jam even in process conditions involving a lot of solid material.
5. Milled slots prevent rolling of the body ring that protects the seal face. This eliminates tension peaks that would distort the seal face.
6. The special double-balanced design allows the use of both pressurised and non-pressurised seal water.

Technical specifications	
Stuffing box pressure	max. 15 bar (215 psi)
Speed	max. 20 m/s (65 ft/s)
Temperature	max. 120 °C (250 °F)
Materials	
Seal faces	SiC/Carbon or SiC/SiC
O-rings	EPDM PTFE Viton®
Metal parts	Standard material AISI 329 (Titanium, UHB)
Springs	Nimonic steel

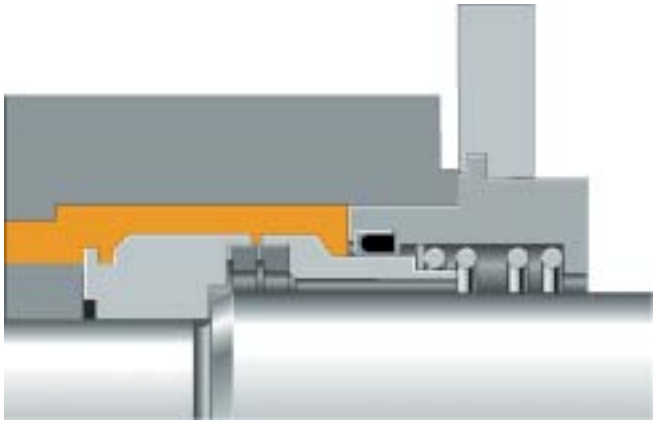

Safeunit™

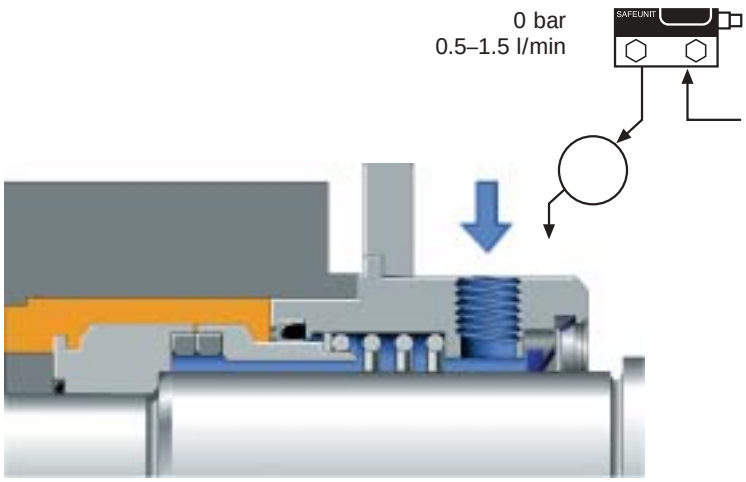

Technical specifications	
Stuffing box pressure	max. 15 bar (215 psi)
Speed	max. 20 m/s (65 ft/s)
Temperature	max. 150 °C (300 °F)
Materials	
Seal faces	SiC/Carbon or SiC/SiC
O-rings	EPDM PTFE Viton®
Metal parts	Standard material AISI 329 (Titanium, UHB)
Springs	Nimonic steel

Safeunit™

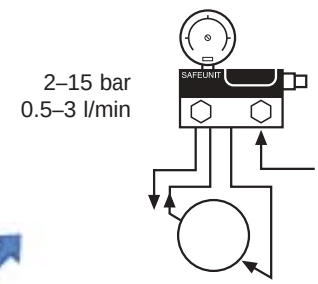

This is technically the most advanced seal available today. In combination with the seal water control device SAFEUNIT™, the seal is a reliable and long-lasting solution.

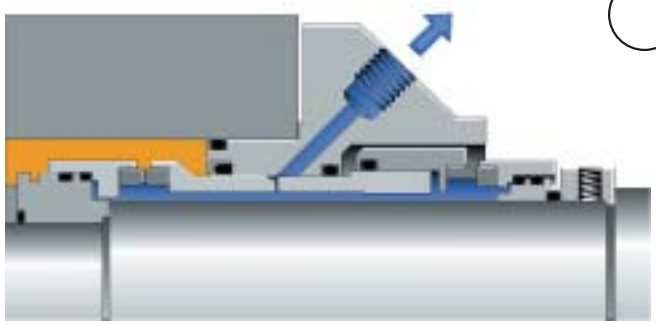

Technical specifications	
Stuffing box pressure	max. 20 bar (290 psi)
Seal water pressure	max. 15 bar (215 psi)
Speed	max. 30 m/s (65 ft/s)
Temperature	max. 180 °C (350 °F)
Materials	
Seal faces	SiC/SiC (product side) SiC/Carbon (atmosphere side)
O-rings	PTFE (product side) Alternatives: EPDM, Viton® etc.
Metal parts	Standard material AISI 329 (Titanium, UHB)
Springs	Nimonic steel

Mechanical Sealing Systems

SE Seal Identification Codes

E.g. **SE2-P1-QRMG-301169**

XXX-XX-X_1-X_2-X_3-X_4-XXXXXX

① ② ③ ④

① Type of seal
SE1: single seal
SEW: quench wash seal
SE2: double seal

② Shaft diameter: (mm, in)

③ Material codes

X_1	X_2	X_3	X_4
Q-SiC/SiC	R-AISI 316/329	M-PTFE	O- single seal
G-SiC/carbon	T-titanium	E-EPDM	N-TC/carbon
T-TC/TC	U-UHB 904 L	V-Viton®	G-SiC/carbon
			V- V-ring (quench)

④ Design number
P1= tailor made for APP pumps with four bolts
AP= new seal version

John Crane has a comprehensive network of highly trained representatives, distributors, and installation and maintenance personnel. Contact your local John Crane sales office for more information.

Europe
Slough, UK
Tel: 44-1753-224000
Fax: 44-1753-224224

Latin America
São Paulo, Brazil
Tel: 55-11-3371-2500
Fax: 55-11-3371-2599

Middle East, Africa, Asia
Dubai, United Arab Emirates
Tel: 971-4-3438940
Fax: 971-4-3438970

North America
Morton Grove, Illinois USA
1-800-SEALING
Tel: 1-847-967-2400
Fax: 1-847-967-3915

smiths
A part of Smiths Group plc

For your nearest John Crane facility, please contact one of the locations above.

If the products featured will be used in a potentially dangerous and/or hazardous process, your John Crane representative should be consulted prior to their selection and use. In the interest of continuous development, John Crane Companies reserve the right to alter designs and specifications without prior notice. It is dangerous to smoke while handling products made from PTFE. Old and new PTFE products must not be incinerated.

©2002 John Crane Print 11/02 **www.johncrane.com** ISO 9001, ISO 14001, ISO/TS 16949 Certified. Details available on request. B-**SE1/SEW/SE2/Eng**