TYPE 285

Non-Contacting Sealol® Metal Bellows Seal

A – Spiral Grooved Rotor
B – Stator
C – Metal Bellows
D – Antispark Sleeve
E – Spring-Energized Seal
F – Retaining Ring
G – Housing
H – Shims

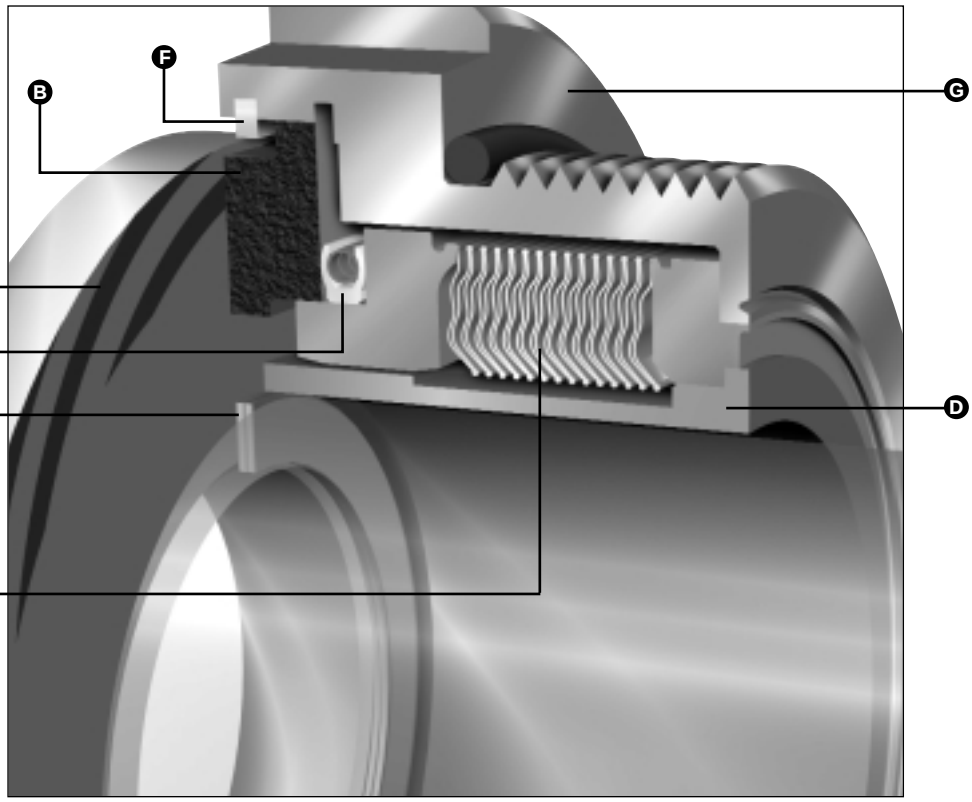

Sealol Welded Metal Bellows

Product Description

- The Type 285 is a non-contacting welded metal bellows seal for cryogenic applications.
- Thanks to its design and materials of construction, the Type 285 can safely seal the most common industrial liquid gases. It fits the most popular cryogenic pumps: site-based or road tanker pumps.

Performance Capabilities

- Temperature:
  -196˚C/-320˚F to Ambient
- Pressure:
  Up to 7 bar g/100 psig
- Speed:
  Up to 10,000 rpm
- End Play/Axial Float Allowance:
  0.13mm/0.005" F.I.M. max.
- Shaft Runout:
  0.001mm per mm/0.001"per Inch of Shaft Diameter F.I.M. max.

Design Features/Benefits

- No Face Wear
- Specially Designed Stationary Bellows
- Floating Stator
- Compact Design
- Meets Liquid Oxygen (LOX) Safety Standards
- Antispark Sleeve and Retaining Ring
- Reduced Power Consumption
- Minimal Product Loss

Applications

Industrial Liquid Gases, Including:

- Oxygen,
- Nitrogen, and
- Argon.

TYPE 285

Non-Contacting Sealol Metal Bellows Seal

Type 285 Typical Arrangement

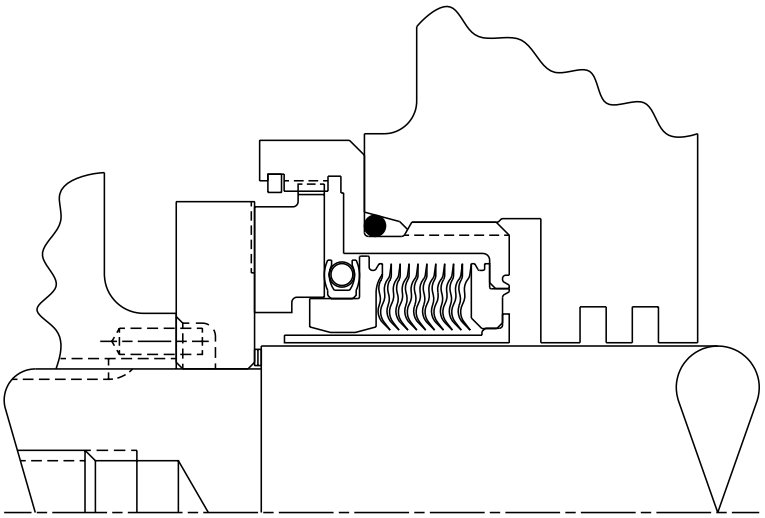

Materials of Construction

SEAL COMPONENTS	STANDARD MATERIALS
Rotor	Tungsten Carbide
Stator	Carbon
Spring-Energized Seal	Virgin PTFE, Cobalt-Chrome Alloy Spring
Antispark Sleeve	Tin Bronze
Metal Bellows	Alloy 718 (Alloy 625 End Fittings)
Retaining Ring	Nickel-Copper Alloy
Shims	Copper Alloy
Other Metal Parts	316L Stainless Steel

Sealol Welded Metal Bellows

Sealol Design Features

- Optimum 45° Tilt Angle
- Three-Sweep Radius
- Nesting Ripple Plate Design
- Light Spring Loads

Sealol Bellows Benefits

- Uniform Plate Rigidity and Stress Distribution
- Enhanced Fatigue Strength
- Self-Cleaning Through Flexing/Slicing Action
- Pressure-Balanced by Design

TYPE 285

Non-Contacting Sealol Metal Bellows Seal

John Crane Non-contacting Technology

John Crane Design Features

- Uni-Directional Pattern

John Crane Spiral Groove Technology Benefits

- Eliminates Face Wear
- Increases Mean Time Between Planned Maintenance (MTBPM)
- Minimizes Product Loss
- Reduces Power Consumption
- Eliminates Lubrication Support Systems Required with Labyrinth Seals

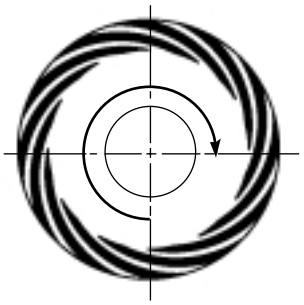

Shaft rotation is clockwise, facing spiral groove pattern.

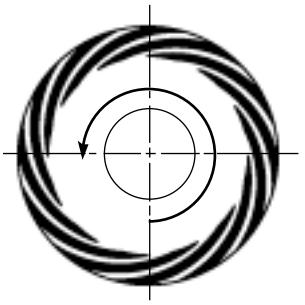

Shaft rotation is counterclockwise, facing spiral groove pattern.

Characteristics of Cryogenic Fluids

Boiling Points

At atmospheric pressure	°C	°F
Oxygen	-183	-297
Nitrogen	-196	-320
Argon	-186	-303

Vapor Pressure Curve for Nitrogen

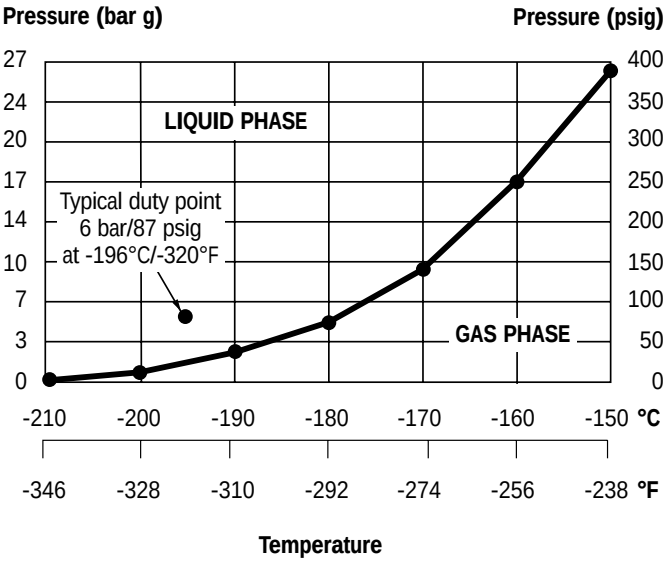

John Crane

North and Latin Americas
Morton Grove, Illinois USA

Tel: 1-847-967-2400
Fax: 1-847-967-3915
1-800-SEALING

Europe, Middle East, Africa
Slough, UK

Tel: 44-1753-224000
Fax: 44-1753-224224

Asia Pacific
Singapore

Tel: 65-222-9161
Fax: 65-223-5035

TI Group
Global Specialised Engineering

For your nearest John Crane facility, please contact one of the locations above.

If the products featured will be used in a potentially dangerous and/or hazardous process, your John Crane representative should be consulted prior to their selection and use. In the interest of continuous development, John Crane Companies reserve the right to alter designs and specifications without prior notice. It is dangerous to smoke while handling products made from PTFE. Old and new PTFE products must not be incinerated.

©1999 John Crane Print 7/99