TYPE GL1B

Formed Metal Bellows Seal

GL1B

A – Seat/Mating Ring
B – Face/Primary Ring
C – Drive Ring
D – Bellows

Metal Bellows Technology

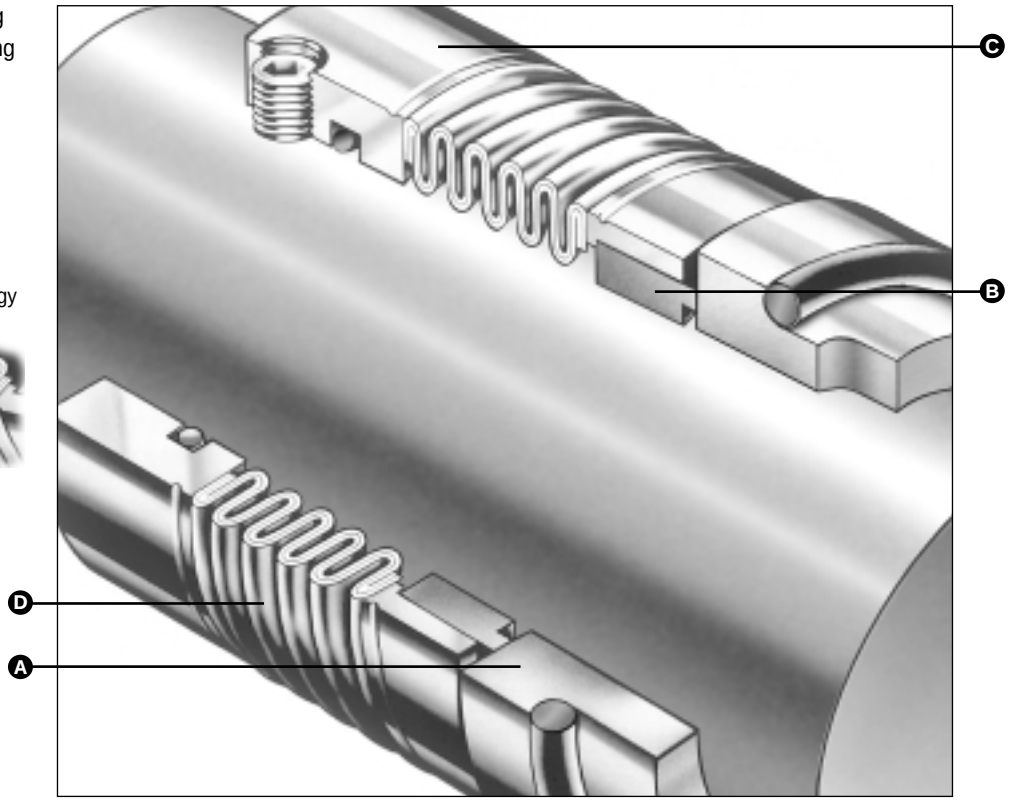

Product Description

The Type GL1B seal is the first double-ply formed bellows seal to meet the dimensional requirements of DIN 24960 L1K. The double-ply design results in an axially flexible, yet extremely strong construction.

- General sealing duties in pumps, mixers, blenders, agitators, compressors, and other rotary shaft equipment.
- For pulp and paper, chemical processing, food processing, wastewater treatment, and other demanding applications.
- Abrasive fluids and slurries in pulp and paper, mining, and wastewater treatment.

Performance Capabilities

- Temperature:
  -40˚C to 260˚C/-40˚F to 500˚F
  (depending on materials used)
- Pressure:
  Dynamic/Static: vacuum to 16 bar/230 psi
  Special Design Available: to 30 bar/435 psi
- Speed:
  25 m/s / 5,000 ft./min.

Design Features/Benefits

- No Sliding O-Ring, Eliminates Fretting
- Hydraulically Balanced Dual Rotation Seal
- Minimum Welds Required in Construction
- Available in Component or Engineered Cartridge Arrangements
- Twin Ply Inconel® Bellows Combines Strength with Axial Flexibility
- Smooth Open Bellows Profile Ideal for Slurries and Fibrous Liquids

Inconel is a registered trademark of Inco Alloys International Inc.

TYPE GL1B

Formed Metal Bellows Seal

Type GL1B Typical Arrangement/Dimensional Data

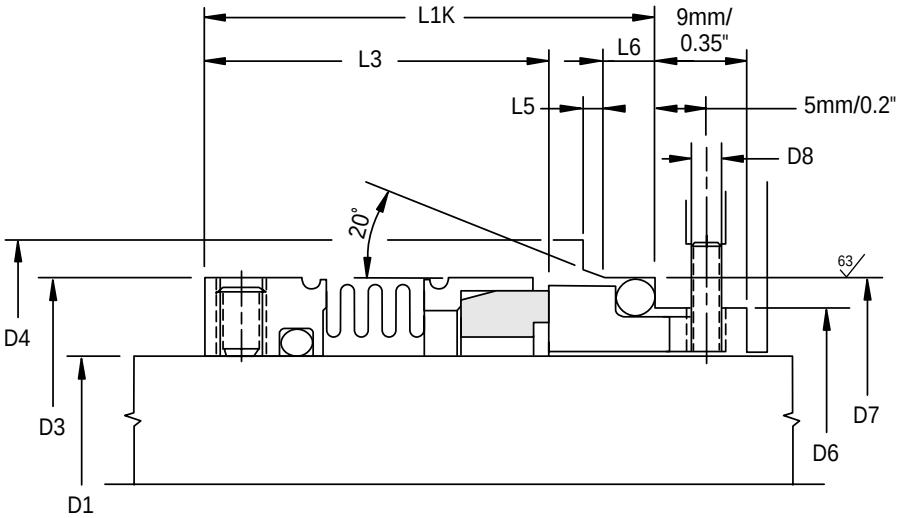

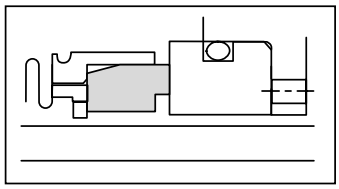

The standard bellows assembly can be run against various alternative stationary seats/ mating rings. Main diagram shows DIN arrangement.

Type GL1B Dimensional Data (mm)

Seal Size (mm)	D1 +0.00/-0.05	D3	D4 Min.	D6	D7 +0.00/-0.05	D8	L1K ±0.5	L3 ±0.5	L5	L6
0250	25	39.6	41	34	40	3	40.0	30.0	2.0	5
0280	28	42.5	44	37	43	3	42.5	32.5	2.0	5
0300	30	44.5	46	39	45	3	42.5	32.5	2.0	5
0320	32	46.5	48	42	48	3	42.5	32.5	2.0	5
0330	33	47.5	49	42	48	3	42.5	32.5	2.0	5
0350	35	49.4	51	44	50	3	42.5	32.5	2.0	5
0380	38	54.0	58	49	56	4	45.0	34.0	2.0	5
0400	40	56.5	60	51	58	4	45.0	34.0	2.0	6
0430	43	56.5	63	54	61	4	45.0	34.0	2.0	6
0450	45	63.3	65	56	63	4	45.0	34.0	2.0	6
0480	48	65.2	68	59	66	4	45.0	34.0	2.0	6
0500	50	66.3	70	62	70	4	47.5	34.5	2.5	6
0530	53	71.5	73	65	73	4	47.5	34.5	2.5	6
0550	55	71.5	75	67	75	4	47.5	34.5	2.5	6
0580	58	74.7	83	70	78	4	52.5	39.5	2.5	6
0600	60	79.3	85	72	80	4	52.5	39.5	2.5	6
0630	63	82.3	88	75	83	4	52.5	39.5	2.5	6
0650	65	82.3	90	77	85	4	52.5	39.5	2.5	6
0680	68	87.5	93	81	90	4	52.5	37.5	2.5	7
0700	70	89.5	95	83	92	4	60.0	45.0	2.5	7
0750	75	92.5	104	88	97	4	60.0	45.0	2.5	7
0800	80	98.6	109	95	105	4	60.0	44.5	3.0	7
0850	85	107.1	114	100	110	4	60.0	44.5	3.0	7
0900	90	113.5	119	105	115	4	65.0	49.5	3.0	7
0950	95	116.7	124	110	120	4	65.0	49.5	3.0	7
1000	100	123.0	129	115	125	4	65.0	49.5	3.0	7

TYPE GL1B

Formed Metal Bellows Seal

Type GL1B Dimensional Data (inches)

Seal Size (inches)	D1 +0.000/-0.002	D3	D4 Min.	L3 ±0.02
0254	1.000	1.559	1.625	1.181
0285	1.125	1.693	1.750	1.280
0317	1.250	1.815	1.875	1.280
0349	1.375	1.945	2.000	1.280
0381	1.500	2.126	2.250	1.339
0412	1.625	2.224	2.375	1.339
0444	1.750	2.413	2.500	1.339
0476	1.875	2.492	2.625	1.339
0508	2.000	2.685	2.750	1.358
0539	2.125	2.815	2.875	1.358
0571	2.250	2.886	3.000	1.555
0603	2.375	3.122	3.250	1.555
0635	2.500	3.240	3.375	1.555
0666	2.625	3.445	3.625	1.476
0698	2.750	3.523	3.750	1.772
0730	2.875	3.642	3.875	1.772
0762	3.000	3.760	4.000	1.752
0793	3.125	3.882	4.125	1.752
0825	3.250	4.008	4.375	1.752
0857	3.375	4.216	4.500	1.949
0889	3.500	4.339	4.625	1.949
0920	3.625	4.469	4.750	1.949
0952	3.750	4.594	4.875	1.949
0984	3.875	4.717	5.000	1.949
1016	4.000	4.843	5.125	1.949

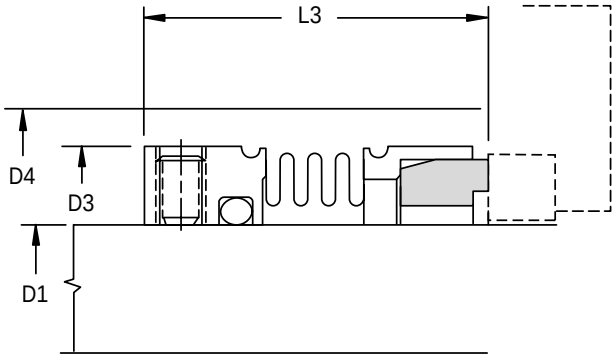

Basic Pressure Rating

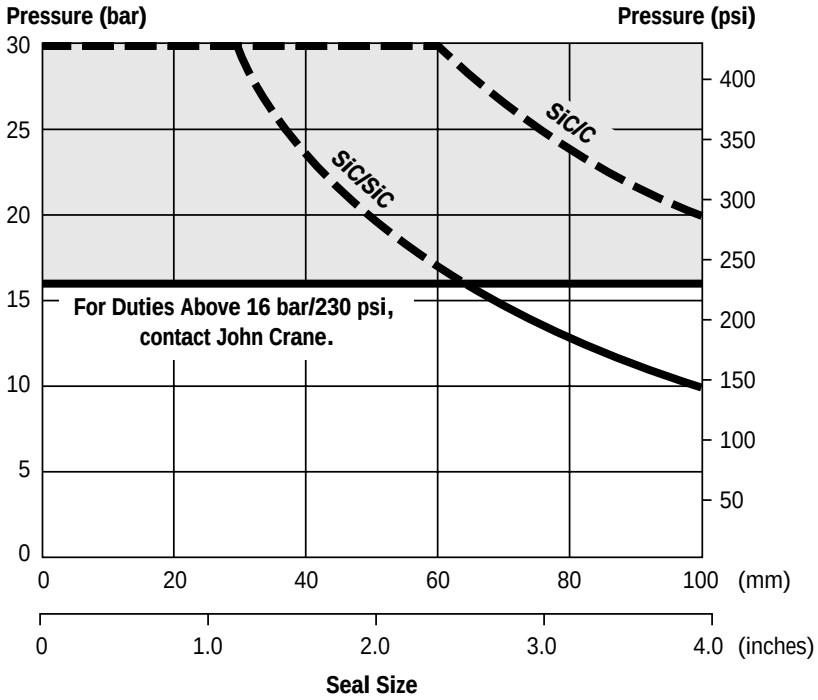

The Basic Pressure Rating is for a standard seal, as shown in the typical arrangement, when installed according to the criteria given in this data sheet and generally accepted industrial practices.

The Basic Pressure Rating assumes stable operation at 3600 rpm in a clean, cool, lubricating, non-volatile liquid with an adequate flush rate. When used with the Multiplier Factors, the Basic Pressure Rating can be adjusted to provide a conservative estimate of the dynamic pressure rating.

For process services outside this range or a more accurate assessment of the dynamic pressure rating, contact John Crane for more information.

TYPE GL1B

Formed Metal Bellows Seal

Multiplier Factors

	Selection Considerations	Multiplier Factor
Sealed Fluid Lubricity	Petrol/Gasoline, Kerosene, or Better Water, Aqueous Solutions Flashing Hydrocarbons	x 1.00 x 0.75 *
Sealed Fluid Temperature (For Carbon Only)	Up to 80°C/175°F From 80°C to 120°C/175°F to 250°F From 120°C to 180°C/250°F to 355°F Above 180°C/350°F	x 1.00 x 0.90 x 0.80 x 0.65

*This seal is not recommended for flashing hydrocarbons.

Example for Determining Pressure Rating Limits:

Seal: 88.9mm/3.5" diameter Type GL1B

Product: Hydrocarbon

Face Material: Silicon Carbide vs. Carbon

Operating Temperature: 217°C/423°F

Using the Basic Pressure Rating graph, the maximum pressure would be 22 bar/319 psi.

From the Multiplier Factors chart, apply the multipliers for the specific service requirements to determine the maximum operating pressure for the application:

22 bar/319 psi x 1 x 0.65 = 14.3 bar/207 psi

The maximum pressure rating for the this 88.9mm/3.5" GL1B formed bellows is 14.3 bar/207 psi.

Materials of Construction

SEAL COMPONENTS	MATERIALS	
Description	**Standard**	**Options**
Face/Primary Ring	Carbon Graphite in Duplex Stainless Steel (UNS S31803) Silicon Carbide in Duplex Stainless Steel (UNS S31803)	—
Seat/Mating Ring	Silicon Carbide	Nickel Binder Tungsten Carbide
Bellows	Inconel® 625	—
Secondary O-Rings	Ethylene Propylene Fluorocarbon Nitrile Perfluoroelastomer	PTFE*

Inconel is a registered trademark of Inco Alloys International, Inc. *Refer to John Crane.

John Crane

North America
Morton Grove, Illinois USA
Tel: 1-847-967-2400
Fax: 1-847-967-3915
1-800-SEALING

Europe, Middle East, Africa
Slough, UK
Tel: 44-1753-224000
Fax: 44-1753-224224

Latin America
São Paulo, Brazil
Tel: 55-11-3049-9900
Fax: 55-11-3849-8270

Asia Pacific
Singapore
Tel: 65-222-9161
Fax: 65-223-5035

TI Group
Global Specialised Engineering

For your nearest John Crane facility, please contact one of the locations above.

If the products featured will be used in a potentially dangerous and/or hazardous process, your John Crane representative should be consulted prior to their selection and use. In the interest of continuous development, John Crane Companies reserve the right to alter designs and specifications without prior notice. It is dangerous to smoke while handling products made from PTFE. Old and new PTFE products must not be incinerated.

©2000 John Crane Print 9/00