TYPE 48LP/48MP/48HP

Low Emission Elastomer O-Ring Seals

48LP/48MP/48HP

A – Seat/Mating Ring
B – Face/Primary Ring
C – Spring
D – Sleeve
E – Retainer

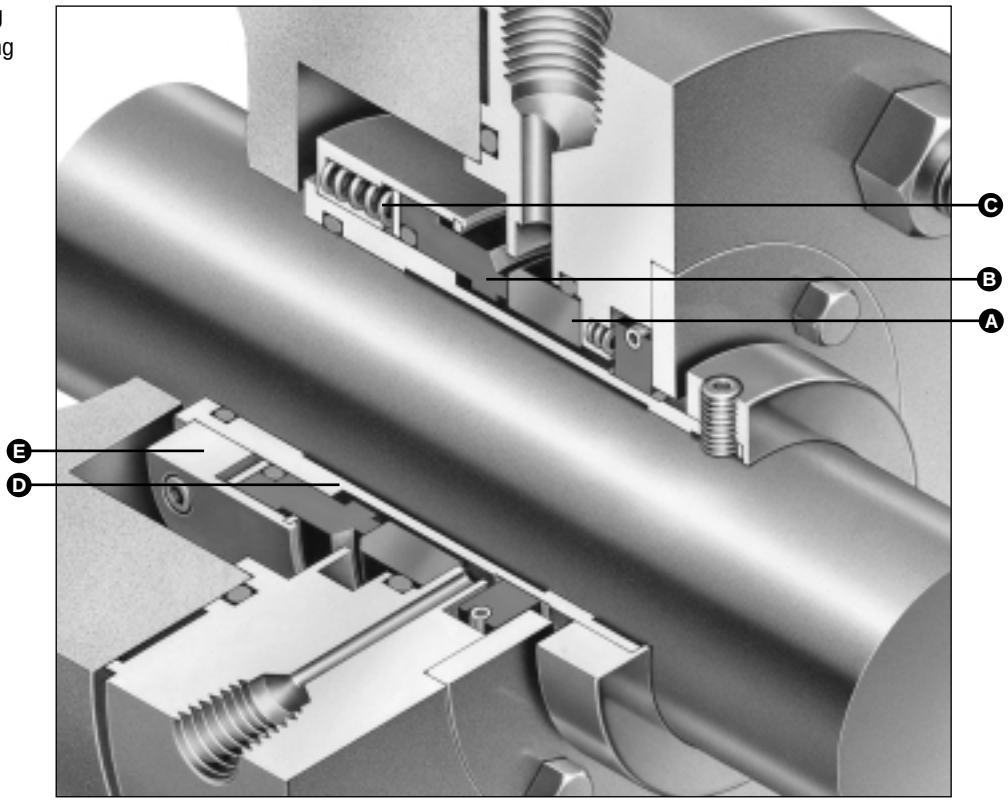

Product Description

Type 48 Seals evolved from the successful, proven John Crane Type 8B1 design, the preferred choice for safe, reliable, unpressurized tandem and pressurized dual seal arrangements in petroleum services for more than four decades. The Type 48 is a dependable, engineered mechanical seal developed specifically for single seal installations to attain M.A.C.T. (Maximum Achievable Controllable Technology) compliance in light hydro-carbons and other VOCs (volatile organic compounds). Type 48 Single Seals control emissions to less than 500 ppm. Available in cartridge or optional shaft-mounted seal arrangement.

- Industrial applications involved in the processing of VOCs and similar hazardous materials.
- Lubrication liquids, aqueous solutions, chemicals, light hydrocarbons, and water services.

Performance Capabilities

- Temperature: -40°C to 260°C/-40°F to 500°F
- Pressure: 69 bar g/1000 psig
- Speed: Up to 25 m/s/5000 fpm

Consult John Crane Engineering for higher speed and pressure applications.

Design Features

Low Emission Single Seal — Designed to satisfy U.S.A. federal, state, and local regulatory requirements. Type 48 assures emission control with a single seal arrangement in VOC services. Years of low emission sealing are provided. Available with fixed, floating, and segmented type throttle bushings that can be suited to fit the application needs.

Type 48 Sealing Package — Type 48 Seals are application-specific with the proper selection of primary ring, mating ring materials, and flush arrangement. Each seal has the built-in capability to offset the combined effects of pressure distortion, thermal distortion, and heat generation on leakage and wear. Specific seal head application is based on seal size, shaft speed, and other variables. Type 48 Seals also can be provided in an unpressurized/pressurized dual seal.

Computer Optimized Seal Faces — Computer modeling minimizes thermal and pressure caused distortion. For optimal performance, face materials are specified antimony filled carbon graphite versus silicon carbide as standard. For higher duty applications, the 48HP uses a special hydropadded face geometry. O-ring drag is reduced by tighter tolerances and smoother sliding surfaces.

Flush Maximizes Cooling — Available with an extended flush with single point injection and a large percentage of the mating ring exposed to the process fluid for cooler running. For higher heat loads, a distributed flush with improved heat transfer characteristics is recommended.

TYPE 48LP/48MP/48HP

Low Emission Elastomer O-Ring Seals

Type 48LP (Low Pressure) Typical Arrangement

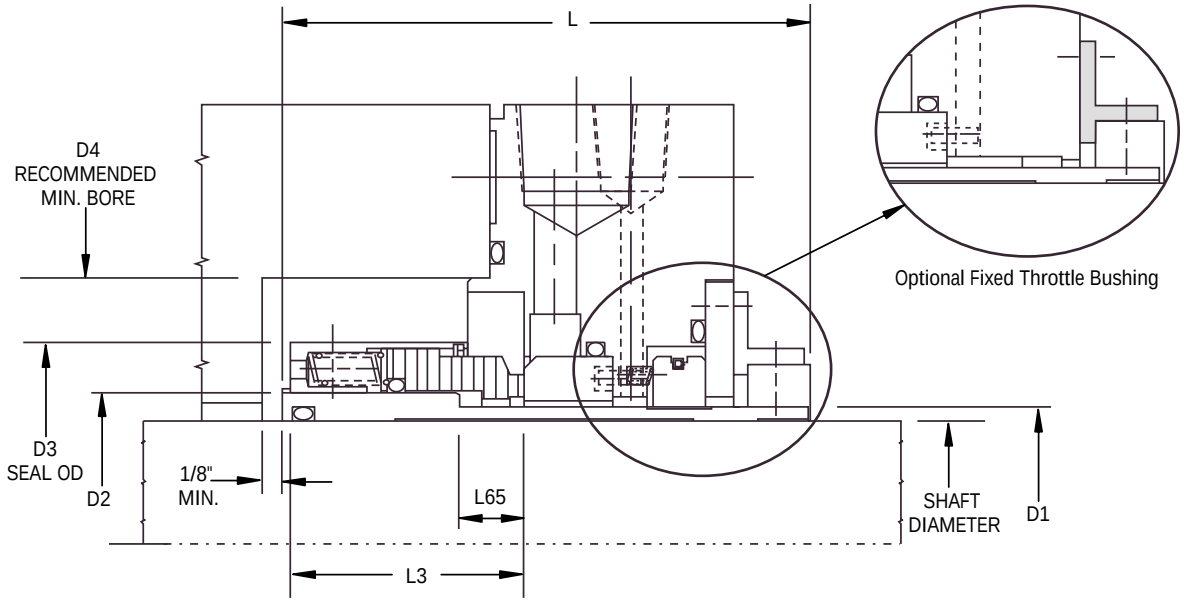

Type 48MP (Moderate Pressure) / 48HP (High Pressure) Typical Arrangement

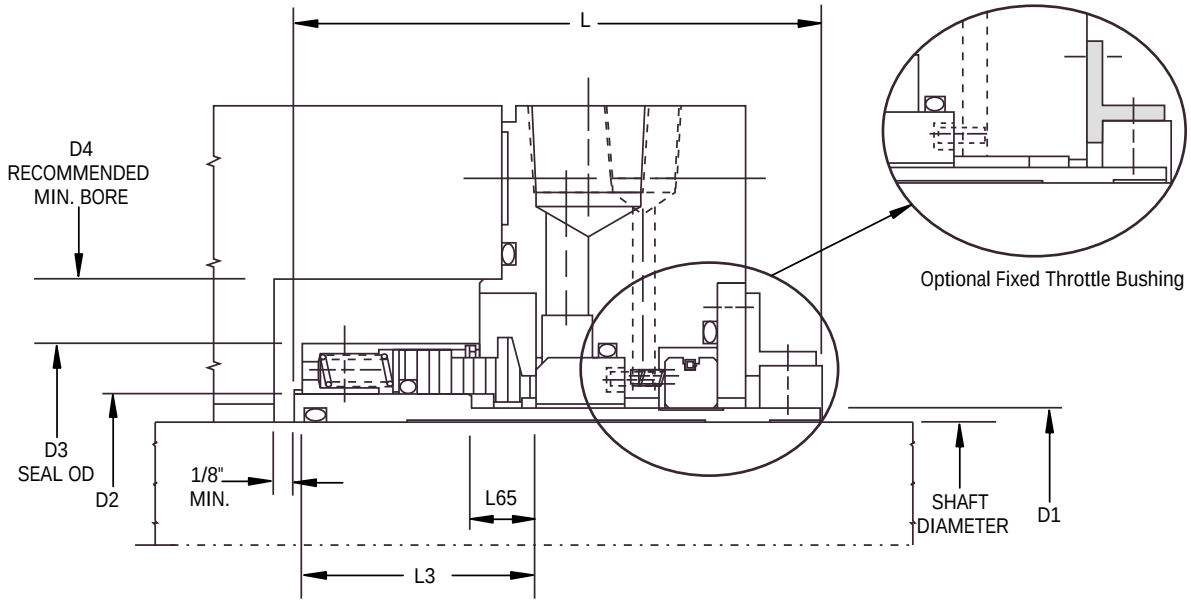

TYPE 48LP/48MP/48HP

Low Emission Elastomer O-Ring Seals

Type 48 Dimensional Data (inches)

Shaft Dia. (inches)	D1	D2	D3	D4	L3	L65	L
1.000	1.250	1.500	2.125	2.375	1.437	0.343	3.812
1.125	1.375	1.625	2.375	2.625	1.750	0.437	4.125
1.250	1.500	1.750	2.500	2.750	1.750	0.437	4.125
1.375	1.625	1.875	2.625	2.875	1.750	0.437	4.125
1.500	1.750	2.000	2.750	3.000	1.750	0.437	4.125
1.625	1.875	2.125	3.000	3.250	2.062	0.500	4.437
1.750	2.000	2.250	3.125	3.375	2.062	0.500	4.437
1.875	2.125	2.375	3.250	3.500	2.062	0.500	4.437
2.000	2.250	2.500	3.375	3.625	2.062	0.500	4.437
2.125	2.375	2.625	3.500	3.750	2.062	0.500	4.437
2.250	2.500	2.750	3.625	3.875	2.062	0.500	4.437
2.375	2.625	2.875	3.750	4.000	2.062	0.500	4.500
2.500	2.750	3.000	3.812	4.062	2.062	0.500	4.500
2.625	2.875	3.125	3.937	4.187	2.062	0.562	4.500
2.750	3.000	3.250	4.125	4.375	2.062	0.562	4.500
2.875	3.125	3.375	4.250	4.500	2.062	0.562	4.656
3.000	3.250	3.500	4.375	4.625	2.062	0.562	4.656
3.125	3.375	3.625	4.500	4.750	2.062	0.562	4.656
3.250	3.500	3.750	4.625	4.875	2.062	0.562	4.656
3.375	3.625	3.875	4.750	5.000	2.062	0.562	4.656
3.500	3.750	4.000	4.875	5.125	2.062	0.562	4.656
3.625	3.875	4.125	5.125	5.375	2.062	0.562	4.656
3.750	4.000	4.250	5.250	5.500	2.062	0.562	4.656
3.875	4.125	4.375	5.375	5.625	2.062	0.562	4.656
4.000	4.250	4.500	5.500	5.750	2.062	0.562	4.656

Can be fitted to metric shaft sizes in cartridge form. Contact John Crane engineering.

Primary Ring Geometry

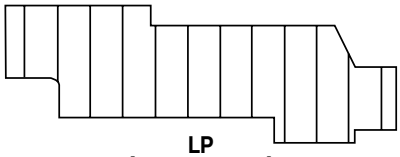

LP
(Low Pressure)

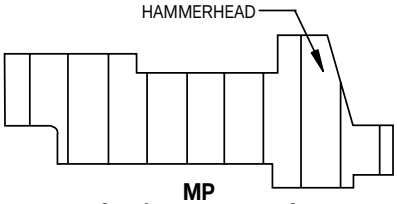

MP
(Moderate pressure)

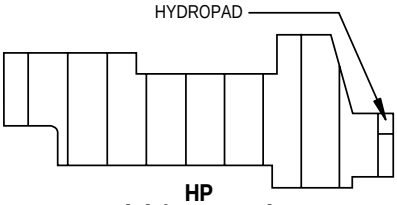

HP
(High Pressure)

Flush Arrangements

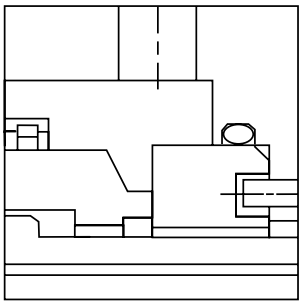

EXTENDED FLUSH

This is a single point injection, providing maximum exposure of the mating ring surface.

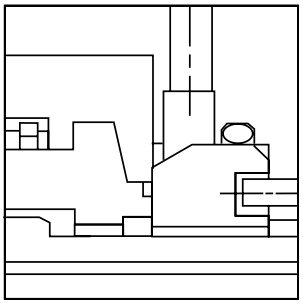

DISTRIBUTED FLUSH

This has a mating ring annulus around the OD and is used in conjunction with a chamfered mating ring to direct flow at the sealing faces.

TYPE 48LP/48MP/48HP

Low Emission Elastomer O-Ring Seals

Pressure Ratings

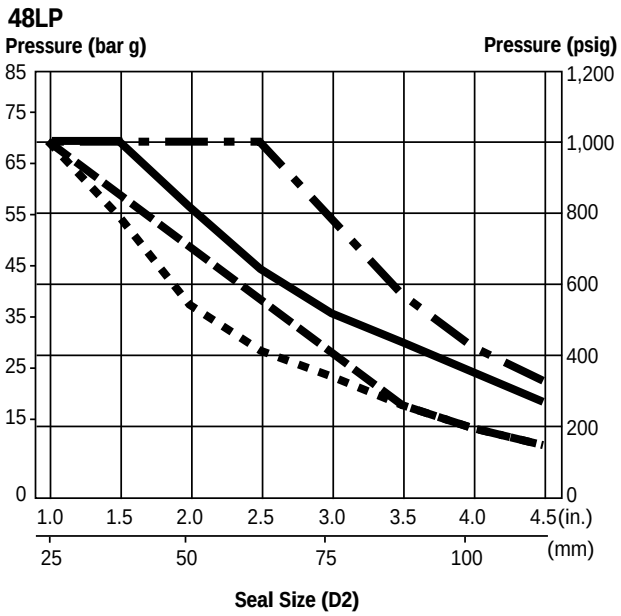

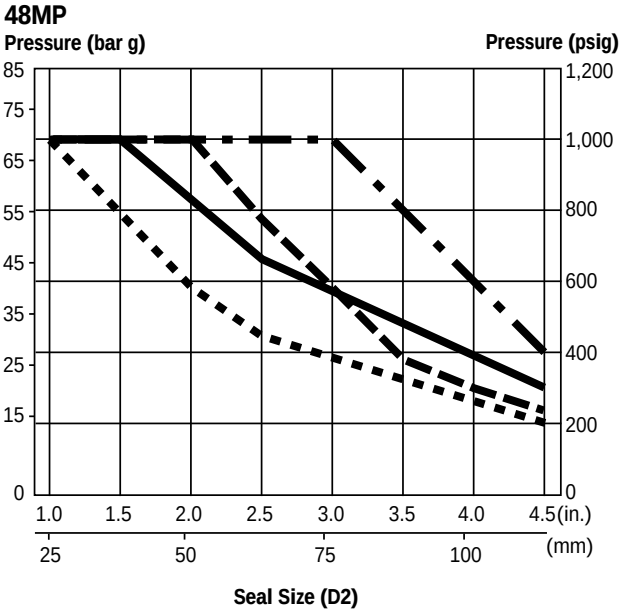

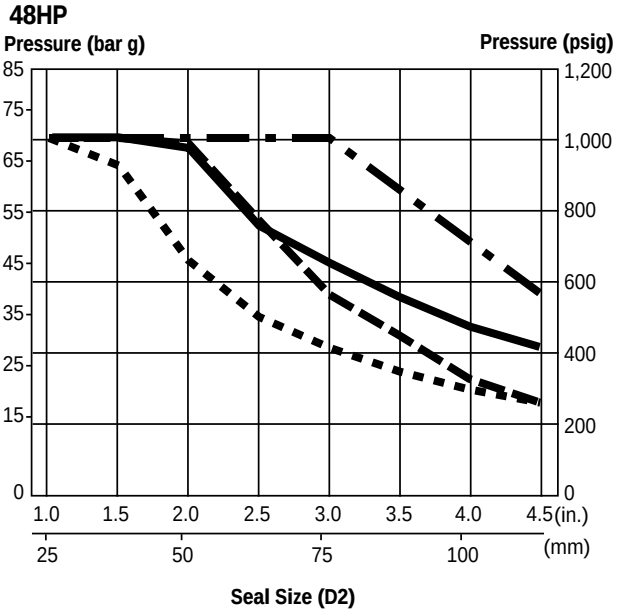

- 1800 RPM Lubricating Fluid
- 3600 RPM Lubricating Fluid
- 1800 RPM Light Hydrocarbon
- 3600 RPM Light Hydrocarbon

Pressure Limit Modifiers

	Selection Considerations	Pressure Factor
Sealed Fluid Temperature	Below 80°C/175°F Above 80°C to 120°C/175°F to 250°F Above 120°C to 180°C/250°F to 350°F Above 180°C to 260°C/350°F to 500°F	x 1.00 x 0.90 x 0.80 x 0.65
Sealed Fluid Lubricity*	Aqueous Solutions	x 0.75

*For aqueous solutions, apply 0.75 multiplier factor to the Lubricating Fluid Curve.

NOTES:

1. The above temperature derating factors apply to seals with carbon primary rings only not hard face vs. hard face combinations.
2. The temperatures noted are product temperatures for single seals or the expected average temperature of the product and buffer/barrier fluid for dual seals.

Example for Determining Pressure Rating Limits:

Seal: 75mm/3" diameter Type 48LP

Product: Lube Oil

Temperature: 82°C/180°F

Speed: 3600 rpm

Using Chart 1 Type 48LP, the pressure limit is 535psig/37 bar g. From the table of modifiers apply the appropriate value, in this case 0.9. For this service condition, the maximum operating pressure is:

535 psig x 0.9 = 481 psig/33 bar g

TYPE 48LP/48MP/48HP

Low Emission Elastomer O-Ring Seals

Materials of Construction

SEAL COMPONENTS	MATERIALS	
Description	**Standard**	**Options**
Face/Primary Ring	Antimony Impregnated Carbon Graphite	Resin Carbon Nickel Binder Tungsten Carbide Reaction Bonded Silicon Carbide Alpha Sintered Silicon Carbide
Seat/Mating Ring	Alpha Sintered Silicon Carbide	Nickel Binder Tungsten Carbide Reaction Bonded Silicon Carbide
Drive Collar Gland Plate Sleeve Retainer Disc Set Screws Snap Ring	316 Stainless Steel	—
Spring	Alloy C-276 (UNS N10276)	—
O-Ring	Fluoroelastomer	Perfluoroelastomer Nitrile Low Temperature Nitrile

TYPE 48LP/48MP/48HP

Low Emission Elastomer O-Ring Seals

Hydrostatic Pressure Limits

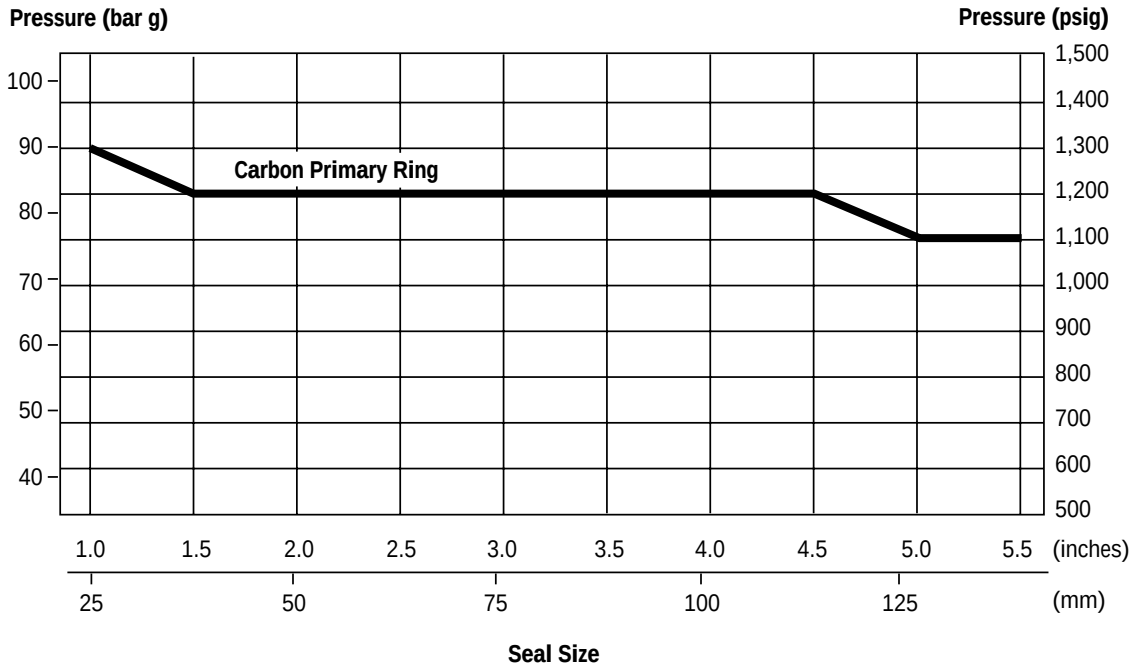

NOTE: The hydrostatic and static limits are based upon o-ring extrusion limits, not component stresses. Therefore, hydrostatic and static limits are the same.

Criteria for Installation

Shaft/Sleeve	Limits
Surface Finish	0.40µmRa/16"Ra
Ovality/Out of Roundness (Shaft)	0.051mm/0.002"
End Play/Axial Float Allowance	±0.13mm/0.005"

Asia Pacific
Singapore
Tel: 65-222-9161
Fax: 65-223-5085

Europe, Middle East, Africa
Slough, UK
Tel: 44-1753-224000
Fax: 44-1753-224224

Latin America
São Paulo, Brazil
Tel: 55-11-3049-9979
Fax: 55-11-3849-4511

North America
Morton Grove, Illinois USA
Tel: 1-847-967-2400
Fax: 1-847-967-3915
1-800-SEALING

For your nearest John Crane facility, please contact one of the locations above.

If the products featured will be used in a potentially dangerous and/or hazardous process, your John Crane representative should be consulted prior to their selection and use. In the interest of continuous development, John Crane Companies reserve the right to alter designs and specifications without prior notice. It is dangerous to smoke while handling products made from PTFE. Old and new PTFE products must not be incinerated.

©2001 John Crane Print 4/01