TYPE 5610/5610Q

UNIVERSAL CARTRIDGE™ Single O-Ring Seals

5610/5610Q

A – Face/Primary Ring
B – Seat/Mating Ring
C – Secondary O-Ring
D – Nonclogging Wave Spring
E – Sleeve
F – Gland

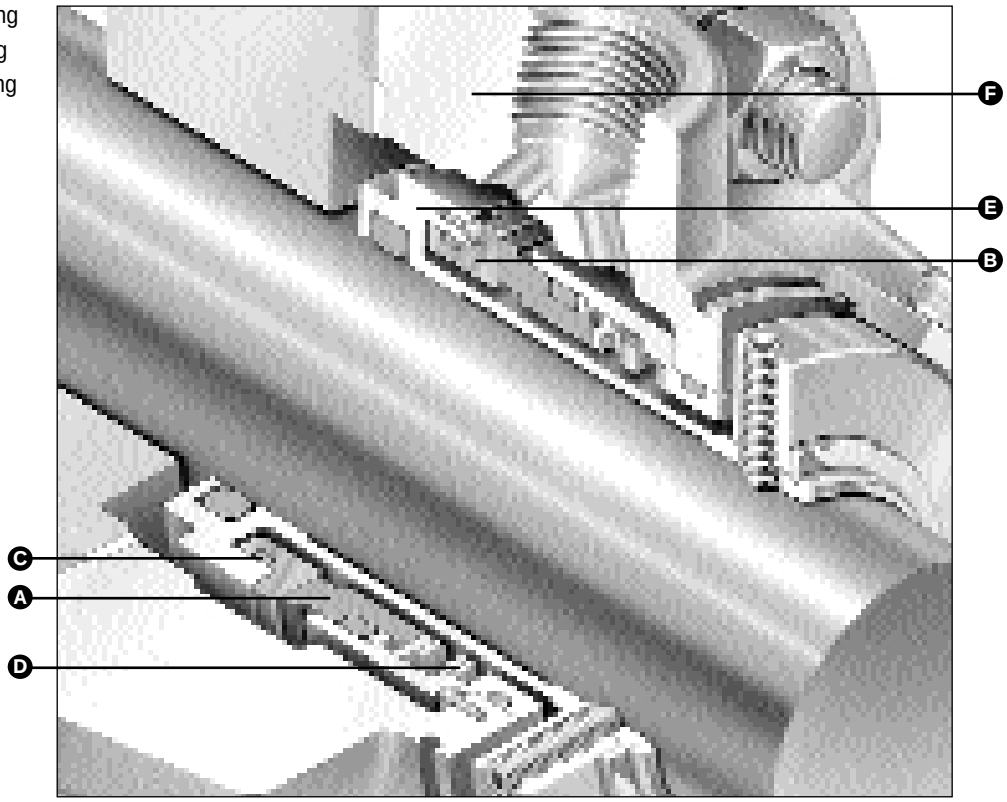

Product Description

The Universal Cartridge 5600 Series is a modular cartridge seal family that includes interchangeable elastomer bellows, Sealol® metal bellows, and elastomer o-ring pusher seal designs.

- Type 5610 and 5610Q single seal arrangements incorporate an elastomer o-ring as the secondary sealing member.
- A common seal head/mating ring set, utilized throughout all versions, is reversible to allow rotating seat/mating ring or rotating seal head operation, and is interchangeable with metal bellows seal heads.
- Seal has an optional quench gland (5610Q) with carbon ring throttle bushing.

Performance Capabilities

- Temperature:
  -30˚C to 205˚C/-20˚F to 400˚F
- Pressure:
  Up to 75mm/3.000": 21 bar g/300 psig max.
  75mm/3.000" and Over: 13 bar g/200 psig max.
- Speed:
  Up to 25 m/s / 5000 fpm
- End Play/Axial Float Allowance:
  0.13mm/0.005"
- Runout/Out of Squareness:
  0.05mm/0.002"

Design Features

- Reversible Seal Head
- Fits ANSI B73.1M, ISO 3069 and DIN 24960 Seal Chambers
- Optimized Primary Ring Design for Greater Reliability
- Nonclogging Wave Spring Outside the Product

Sealol is a registered trademark of John Crane.

TYPE 5610/5610Q

UNIVERSAL CARTRIDGE™ Single O-Ring Seals

Basic Pressure Rating

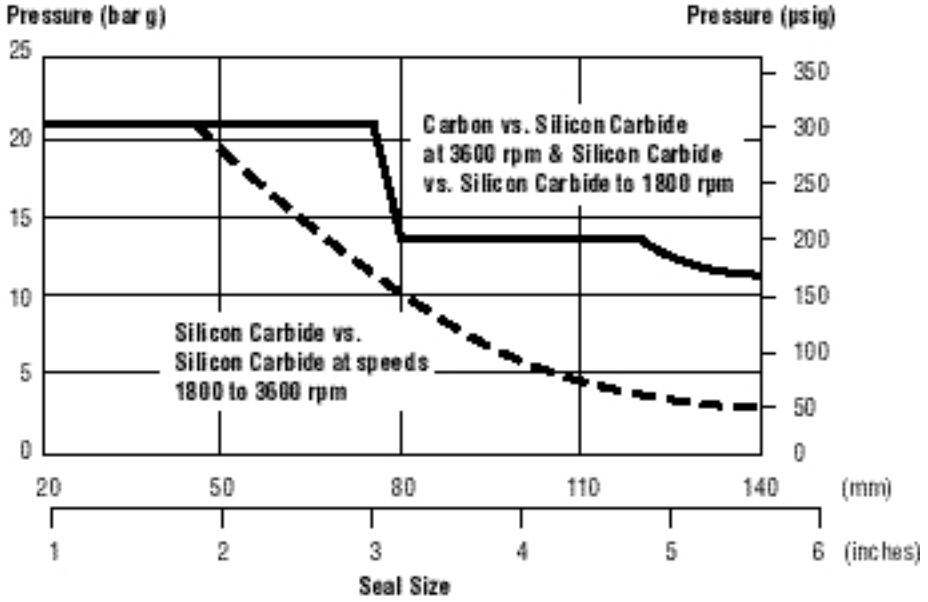

The Basic Pressure Rating is for a standard seal, as shown in the typical arrangement, when installed according to the criteria given in this data sheet and generally accepted industrial practices.

The Basic Pressure Rating assumes stable operation at the speeds indicated on the above chart in a clean, cool, lubricating, nonvolatile liquid with an adequate flush rate. When used with the multiplier factors, the Basic Pressure Rating can be adjusted to provide a conservative estimate of the dynamic pressure rating. For process services outside this range or a more accurate assessment of the dynamic pressure rating, contact John Crane for more information.

Multiplier Factors

	Selection Considerations	Multiplier Factor
Sealed Fluid Lubricity (applies to Silicon Carbide vs. Silicon Carbide only)	Petrol/Gasoline, Kerosene, or Better	x 1.00
	Water and Aqueous Solutions (<80˚C/176˚F)	x 0.75
	Flashing Hydrocarbons*	x 0.60
Sealed Fluid Temperature (applies to Carbon vs. Silicon Carbide, sizes 100mm/4" and above)	Up to 80°C/175°F	x 1.00
	From 80°C to 120°C/175°F to 250°F	x 0.90
	From 120°C to 180°C/250°F to 355°F	x 0.80
	Above 180°C/350°F	x 0.65

*The ratio of sealed pressure to vapor pressure must be greater than 1.5, otherwise consult John Crane. If the specific gravity is less than 0.60, consult John Crane.

Example for Determining Pressure Rating Limits:

Seal: 50.8mm/2" diameter Type 5610

Product: Aqueous Solution

Face Materials: Silicon Carbide vs. Silicon Carbide

Operating Temperature: 80°C/175°F

Operating Speed: 2950 rpm

Using the Pressure Rating Limits graph, the maximum pressure would be 18.5 bar g/268 psig.

From the Multiplier Factors chart, apply the multipliers for the specific service requirements to determine the maximum operating pressure for the application:

18.5 bar g/268 psig x 0.75 x 1 = 13.9 bar g/201 psig

The maximum operating pressure for this 50.8mm/2" Type 5610 is 13.9 bar g/201 psig.

CUT LINE FOR SHORT PAGE

TYPE 5610/5610Q

UNIVERSAL CARTRIDGE™ Single O-Ring Seals

CUT LINE FOR SHORT PAGE

Type 5610 Typical Arrangement/Dimensional Data

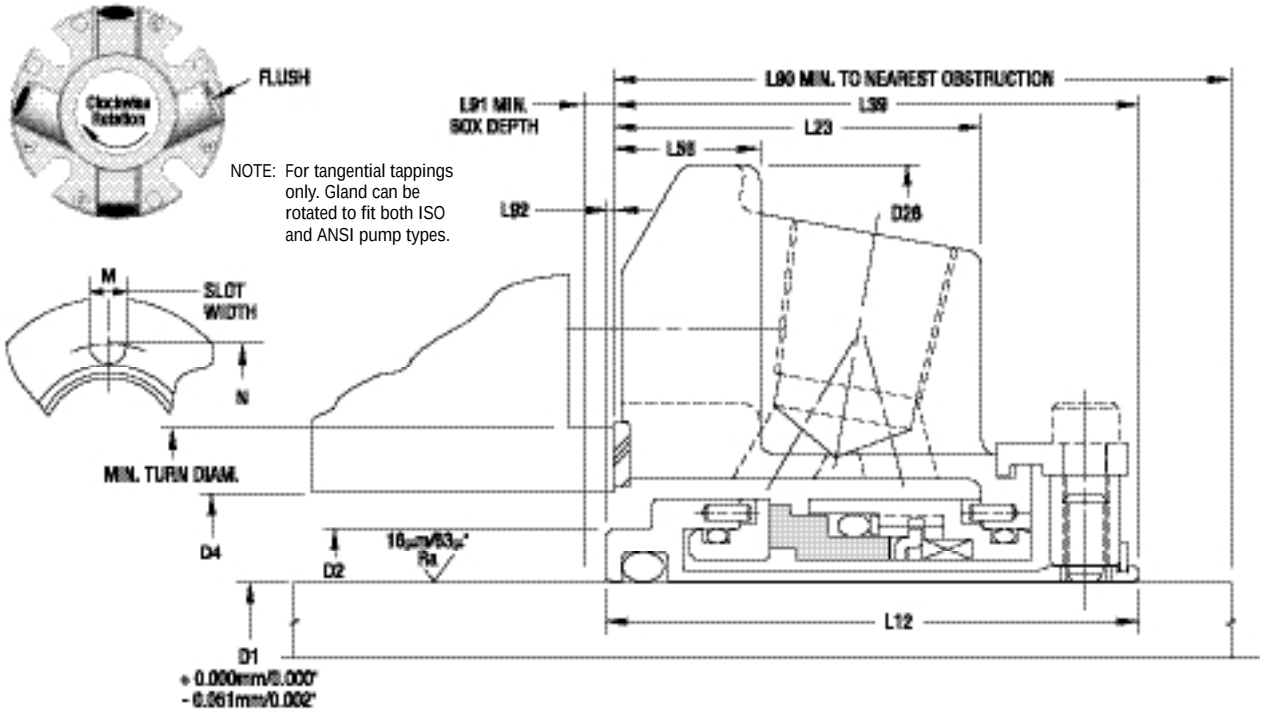

Type 5610 Dimensional Data (inches)

Seal Size/D1 (inches)	D2	D4 Min.	D4 Max.	D26	L12	L23	L39	L56	L90	L91	L92	M	N
1.000	1.375	1.445	1.889	4.000	1.989	1.353	1.954	0.531	2.000	0.160	0.035	0.525	2.805
1.125	1.500	*	2.015	4.125	2.062	1.446	2.062	0.531	2.125	0.125	*	0.525	2.933
1.250	1.625	*	2.294	4.250	2.062	1.446	2.062	0.531	2.125	0.125	*	0.525	3.213
1.375	1.750	*	2.421	4.375	2.062	1.446	2.062	0.531	2.125	0.125	*	0.525	3.338
1.500	1.937	2.007	2.680	4.875	2.156	1.487	2.125	0.593	2.187	0.156	0.031	0.525	3.599
1.625	2.062	2.132	2.812	5.000	2.156	1.487	2.125	0.593	2.187	0.156	0.031	0.562	3.766
1.750	2.170	2.240	2.918	5.250	2.156	1.487	2.125	0.593	2.187	0.156	0.031	0.562	3.875
1.875	2.312	2.382	2.918	5.250	2.156	1.487	2.125	0.593	2.187	0.156	0.031	0.562	3.875
2.000	2.437	2.507	3.015	5.500	2.375	1.601	2.312	1.063	2.375	0.187	0.062	0.562	4.000
2.125	2.562	2.632	3.360	5.859	2.375	1.601	2.312	0.593	2.375	0.187	0.062	0.687	4.469
2.250	2.687	2.757	3.485	6.500	2.375	1.601	2.312	0.593	2.375	0.187	0.062	0.687	4.566
2.375	2.812	2.882	3.610	6.500	2.484	1.717	2.466	0.625	2.528	0.143	0.018	0.687	4.719
2.500	3.062	*	3.891	6.750	2.484	1.717	2.562	0.625	2.625	0.125	*	0.687	5.000
2.625	3.312	*	4.062	6.750	2.500	1.625	2.500	0.625	2.562	0.125	*	0.687	5.170
2.750	3.312	*	4.062	6.750	2.500	1.625	2.500	0.625	2.562	0.125	*	0.687	5.170
2.875	3.375	*	4.186	7.000	2.500	1.725	2.500	0.625	2.562	0.125	*	0.687	5.312
3.000	3.625	*	4.469	7.750	2.500	1.787	2.562	0.685	2.625	0.125	*	0.812	5.720
3.125	3.750	3.853	4.600	7.875	2.562	1.593	2.562	**	2.687	0.125	*	0.812	5.845
3.250	3.750	3.853	4.600	7.437	2.562	1.593	2.510	**	2.635	0.177	0.052	0.812	5.845
3.375	4.000	4.125	4.850	8.125	2.562	1.593	2.562	**	2.687	0.125	*	0.812	6.095
3.500	4.125	4.250	4.975	8.250	2.562	1.593	2.562	**	2.687	0.125	*	0.812	6.220
3.625	4.218	4.343	5.100	8.375	2.562	1.593	2.562	**	2.687	0.125	*	0.687	6.250
3.750	4.343	4.468	5.199	8.750	2.562	1.593	2.562	**	2.687	0.125	*	0.687	6.770
3.875	4.468	4.593	5.375	8.750	2.562	1.593	2.562	**	2.687	0.125	*	0.812	6.636
4.000	4.593	4.718	5.500	9.000	2.562	1.593	2.562	**	2.687	0.125	*	0.812	6.761
4.125	4.718	4.843	5.625	9.000	2.562	1.593	2.562	**	2.687	0.125	*	0.812	6.886
4.250	4.843	4.968	5.750	9.250	2.562	1.593	2.562	**	2.687	0.125	*	0.812	7.011
4.500	5.093	5.218	6.000	9.500	2.562	1.593	2.562	**	2.687	0.125	*	0.812	7.261
4.750	5.343	5.468	6.313	10.375	2.562	1.593	2.562	**	2.687	0.125	*	0.812	7.574
5.000	5.843	5.968	7.260	12.000	2.953	1.749	3.043	**	3.168	0.125	*	0.812	10.000
5.250	6.093	6.218	7.510	12.250	2.953	1.749	3.043	**	3.168	0.125	*	0.812	10.250
5.500	6.343	6.468	8.000	12.687	2.953	1.749	3.043	**	3.168	0.125	*	0.937	10.500

*Not applicable. Completely outside mounted.

**L56 not applicable. Refer to L23 for sizes over 3".

TYPE 5610/5610Q

UNIVERSAL CARTRIDGE™ Single O-Ring Seals

Type 5610 Oversize Bore Dimensional Data (inches)

Seal Size/D1 (inches)	D2	D4 Min.	D4 Max.	D26	L12	L23	L39	L56	L90	L91	L92	M	N	Min. Turn Diam.
1.375	1.750	2.875	3.023	5.375	2.063	1.446	2.062	0.625	2.125	0.250	0.125	0.562	4.062	3.268
1.750	2.170	3.500	3.925	6.500	2.156	1.487	2.125	0.656	2.187	0.250	0.125	0.687	5.093	3.885
1.875	2.312	3.625	3.734	6.500	2.156	1.316	1.954	0.485	2.017	0.327	0.202	0.687	5.093	**
2.125	2.562	3.875	4.250	7.156	2.375	1.570	2.282	0.749	2.407	0.219	0.094	0.687	5.687	4.264
2.500	3.062	4.750	5.078	8.000	2.484	1.697	2.407	0.749	2.625	0.204	0.079	0.687	6.062	5.139
2.625	3.312	4.625	4.740	8.000	2.500	1.617	2.329	0.578	2.454	0.296	0.171	0.687	6.062	***
2.750	3.312	4.750	4.875	8.000	2.500	1.697	2.407	0.656	2.532	0.218	0.093	0.687	6.062	5.139

**Seal cartridge is OD registered on the turn diam. of 4.125".

***Seal cartridge is OD registered on the turn diam. of 5.125".

Type 5610 Dimensional Data (mm)

Seal Size/D1 (mm)	Seal Size Code	D2	D4 Min.	D4 Max.	D26	L12	L23	L39	L56	L90	L91	L92	M	N
24	0240	34.9	36.7	48.0	101.6	50.5	34.4	49.6	13.5	50.8	4.0	0.9	13.3	71.2
25	0250	34.9	36.7	48.0	101.6	50.5	34.4	49.6	13.5	50.8	4.0	0.9	13.3	71.2
28	0280	38.1	*	51.2	104.8	52.4	36.7	52.4	13.5	54.0	3.2	*	13.3	74.5
30	0300	40.0	*	56.5	108.0	52.4	36.7	52.4	13.5	54.0	3.2	*	13.3	79.9
32	0320	41.3	*	58.3	108.0	52.4	36.7	52.4	13.5	54.0	3.2	*	13.3	81.6
33	0330	44.5	*	61.5	111.1	52.4	36.7	52.4	13.5	54.0	3.2	*	13.3	84.8
35	0350	44.5	*	61.5	111.1	52.4	36.7	52.4	13.5	54.0	3.2	*	13.3	84.8
38	0380	49.2	51.0	68.1	123.8	54.8	37.8	54.0	15.1	55.5	4.0	0.8	13.3	91.4
40	0400	52.4	54.2	71.4	127.0	54.8	37.8	54.0	15.1	55.5	4.0	0.8	14.3	95.7
43	0430	55.1	56.9	74.1	133.4	54.8	37.8	54.0	15.1	55.5	4.0	0.8	14.3	98.4
45	0450	55.1	56.9	74.1	133.4	54.8	37.8	54.0	15.1	55.5	4.0	0.8	14.3	98.4
48	0480	58.7	60.5	74.1	133.4	54.8	37.8	54.0	15.1	55.5	4.0	0.8	14.3	98.4
50	0500	61.9	63.7	76.6	139.7	60.3	40.7	58.7	27.0	60.3	4.7	1.6	14.3	101.6
53	0530	65.1	66.9	85.3	148.8	60.3	40.7	58.7	15.1	60.3	4.7	1.6	17.4	113.5
55	0550	66.7	75.0	85.3	148.8	60.3	40.7	58.7	15.1	60.3	4.7	1.6	17.4	113.5
58	0580	68.2	70.0	88.5	165.1	60.3	40.7	58.7	15.1	60.3	4.7	1.6	17.4	116.0
60	0600	71.4	73.2	91.7	165.1	63.1	43.6	62.6	15.9	64.2	3.6	1.6	17.4	119.9
63	0630	77.8	*	98.8	171.5	63.1	43.6	65.1	15.9	66.7	3.2	0.5	17.4	127.0
65	0650	77.8	*	98.8	171.5	63.1	43.6	65.1	15.9	66.7	3.2	*	17.4	127.0
68	0680	84.1	*	103.2	171.5	63.5	41.3	63.5	15.9	65.1	3.2	*	17.4	131.3
70	0700	84.1	*	103.2	171.5	63.5	41.3	63.5	15.9	65.1	3.2	*	17.4	131.3
75	0750	92.1	*	113.5	196.9	63.5	45.4	65.1	17.4	66.7	3.2	*	20.6	145.3
80	0800	95.3	97.9	116.8	188.9	65.1	40.5	63.8	**	66.9	4.5	1.3	20.6	148.4
85	0850	101.6	104.8	123.2	206.4	65.1	40.5	65.1	**	68.3	3.2	*	20.6	154.8
90	0900	107.1	110.3	129.5	212.7	65.1	40.5	65.1	**	68.3	3.2	*	17.4	158.8
95	0950	110.3	113.5	132.1	222.3	65.1	40.5	65.1	**	68.3	3.2	*	17.4	172.0
100	1000	116.7	119.8	139.7	228.6	65.1	40.5	65.1	**	68.3	3.2	*	20.6	171.7
105	1050	119.8	123.0	142.9	228.6	65.1	40.5	65.1	**	68.3	3.2	*	20.6	174.9
110	1100	129.4	132.5	152.4	241.3	65.1	40.5	65.1	**	68.3	3.2	*	20.6	184.4
115	1150	129.4	132.5	152.4	241.3	65.1	40.5	65.1	**	68.3	3.2	*	20.6	184.4
120	1200	135.7	138.9	160.4	263.5	65.1	40.5	65.1	**	68.3	3.2	*	20.6	192.4
125	1250	148.4	151.6	184.4	304.8	75.0	44.4	77.3	**	80.5	3.2	*	20.6	254.0
130	1300	154.8	157.9	190.8	311.2	75.0	44.4	77.3	**	80.5	3.2	*	20.6	260.4
135	1350	161.1	164.3	203.2	322.3	75.0	44.4	77.3	**	80.5	3.2	*	23.8	266.7
140	1400	161.1	164.3	203.2	322.3	75.0	44.4	77.3	**	80.5	3.2	*	23.8	266.7

*Not applicable. Completely outside mounted.

**L56 not applicable. Refer to L23 for sizes over 75mm.

TYPE 5610/5610Q

UNIVERSAL CARTRIDGE™ Single O-Ring Seals

Type 5610Q Typical Arrangement/Dimensional Data

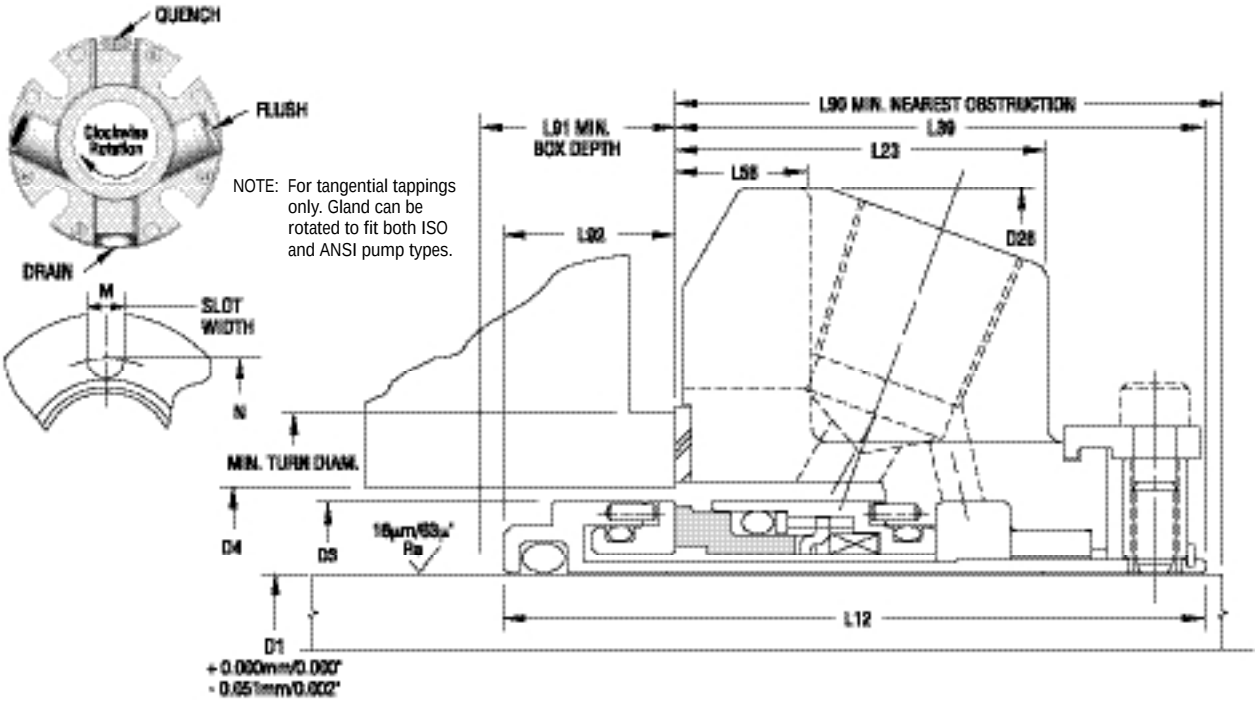

Type 5610Q Dimensional Data (inches)

Seal Size/D1 (inches)	D3	D4 Min.	D4 Max.	D26	L12	L23	L39	L56	L90	L91	L92	M	N
1.000	1.564	1.625	1.889	4.000	2.575	1.353	1.954	0.531	2.000	0.746	0.621	0.525	2.805
1.125	1.689	1.750	2.015	4.125	2.651	1.446	2.062	0.531	2.125	0.714	0.589	0.525	2.933
1.250	1.812	1.875	2.294	4.250	2.728	1.446	2.062	0.531	2.125	0.791	0.666	0.525	3.213
1.375	1.939	2.000	2.421	4.375	2.728	1.446	2.062	0.531	2.125	0.791	0.666	0.525	3.338
1.500	2.187	2.250	2.680	4.875	2.744	1.487	2.125	0.593	2.187	0.744	0.619	0.525	3.599
1.625	2.312	2.375	2.812	5.000	2.744	1.487	2.125	0.593	2.187	0.744	0.619	0.562	3.766
1.750	2.406	2.480	2.918	5.250	2.744	1.487	2.125	0.593	2.187	0.744	0.619	0.562	3.875
1.875	2.549	2.625	2.918	5.250	2.744	1.487	2.125	0.593	2.187	0.744	0.619	0.562	3.875
2.000	2.673	2.750	3.015	5.500	2.963	1.601	2.312	1.032	2.375	0.775	0.650	0.562	4.000
2.125	2.798	2.875	3.360	5.859	2.963	1.601	2.313	0.593	2.375	0.775	0.650	0.687	4.469
2.250	2.923	3.000	3.485	6.500	2.963	1.601	2.313	0.593	2.375	0.775	0.650	0.687	4.566
2.375	3.048	3.125	3.610	6.500	3.063	1.717	2.466	0.625	2.528	0.722	0.597	0.687	4.719
2.500	3.301	3.375	3.891	6.750	2.980	1.717	2.563	0.625	2.625	0.542	0.417	0.687	5.000
2.625	3.551	3.625	4.062	6.750	3.088	1.625	2.500	0.625	2.562	0.713	0.588	0.687	5.170
2.750	3.551	3.625	4.062	6.750	3.088	1.625	2.500	0.625	2.562	0.713	0.588	0.687	5.170
2.875	3.614	3.687	4.186	7.000	3.088	1.725	2.500	0.625	2.562	0.713	0.588	0.687	5.312
3.000	3.864	3.934	4.469	7.750	3.088	1.787	2.562	0.685	2.625	0.651	0.526	0.812	5.720
3.125	4.022	4.125	4.600	7.875	3.156	1.593	2.562	*	2.687	0.719	0.594	0.812	5.845
3.250	4.022	4.125	4.600	7.437	3.093	1.593	2.510	*	2.635	0.708	0.583	0.812	5.845
3.375	4.246	4.375	4.850	8.125	3.156	1.593	2.562	*	2.687	0.719	0.594	0.812	6.095
3.500	4.371	4.500	4.975	8.250	3.156	1.593	2.562	*	2.687	0.719	0.594	0.812	6.220
3.625	4.500	4.625	5.100	8.375	3.156	1.593	2.562	*	2.687	0.719	0.594	0.687	6.250
3.750	4.625	4.724	5.199	8.750	3.156	1.593	2.562	*	2.687	0.719	0.594	0.687	6.770
3.875	4.750	4.875	5.375	8.750	3.156	1.593	2.562	*	2.687	0.719	0.594	0.812	6.636
4.000	4.875	5.000	5.500	9.000	3.156	1.593	2.562	*	2.687	0.719	0.594	0.812	6.761
4.125	5.000	5.125	5.625	9.000	3.156	1.593	2.562	*	2.687	0.719	0.594	0.812	6.886
4.250	5.125	5.250	5.750	9.250	3.156	1.593	2.562	*	2.687	0.719	0.594	0.812	7.011
4.500	5.375	5.500	6.000	9.500	3.156	1.593	2.562	*	2.687	0.719	0.594	0.812	7.261
4.750	5.625	5.750	6.313	10.375	3.156	1.593	2.562	*	2.687	0.719	0.594	0.812	7.574
5.000	6.125	6.250	7.260	12.000	3.609	1.749	3.043	*	3.168	0.691	0.566	0.812	10.000
5.250	6.375	6.500	7.510	12.250	3.609	1.749	3.043	*	3.168	0.691	0.566	0.812	10.250
5.500	6.625	6.750	8.000	12.687	3.609	1.749	3.043	*	3.168	0.691	0.566	0.937	10.500

*L56 not applicable. Refer to L23 for sizes over 3".

TYPE 5610/5610Q

UNIVERSAL CARTRIDGE™ Single O-Ring Seals

Type 5610Q Oversize Bore Dimensional Data (inches)

Seal Size/D1 (inches)	D3	D4 Min.	D4 Max.	D26	L12	L23	L39	L56	L90	L91	L92	M	N	Min. Turn Diam.
1.375	1.939	2.875	3.023	5.375	2.728	1.446	2.062	0.625	2.125	0.791	0.666	0.562	4.062	3.268
1.750	2.406	3.500	3.925	6.500	2.744	1.487	2.125	0.656	2.187	0.744	0.619	0.687	5.093	3.885
1.875	2.549	3.625	3.734	6.500	2.744	1.316	1.954	0.485	2.017	0.915	0.790	0.687	5.093	**
2.125	2.798	3.875	4.250	7.156	2.963	1.570	2.282	0.749	2.407	0.806	0.681	0.687	5.687	4.264
2.500	3.301	4.750	4.875	8.000	2.980	1.697	2.407	0.656	2.532	0.698	0.573	0.687	6.062	5.139
2.625	3.551	4.625	4.740	8.000	3.088	1.617	2.329	0.578	2.454	0.884	0.759	0.687	6.062	***
2.750	3.551	4.250	4.875	8.000	3.088	1.697	2.407	0.656	2.532	0.806	0.681	0.687	6.062	5.139

**Seal cartridge is OD registered on the turn diam. of 4.125".

***Seal cartridge is OD registered on the turn diam. of 5.125".

Type 5610Q Dimensional Data (mm)

Seal Size/D1 (mm)	Seal Size Code	D3	D4 Min.	D4 Max.	D26	L12	L23	L39	L56	L90	L91	L92	M	N
24	0240	39.7	41.3	48.0	101.6	65.4	34.4	49.6	13.5	50.8	18.9	15.8	13.3	71.2
25	0250	39.7	41.3	48.0	101.6	65.4	34.4	49.6	13.5	50.8	18.9	15.8	13.3	71.2
28	0280	42.9	44.5	51.2	104.8	67.3	36.7	52.4	13.5	54.0	18.1	15.0	13.3	74.5
30	0300	44.5	46.1	56.5	108.0	65.1	36.7	52.4	13.5	54.0	15.9	12.7	13.3	79.9
32	0320	46.0	47.6	58.3	108.0	69.3	36.7	52.4	13.5	54.0	20.1	16.9	13.3	81.6
33	0330	49.3	50.8	61.5	111.1	69.3	36.7	52.4	13.5	54.0	20.1	16.9	13.3	84.8
35	0350	49.3	50.8	61.5	111.1	69.3	36.7	52.4	13.5	54.0	20.1	16.9	13.3	84.8
38	0380	55.5	57.2	68.1	123.8	69.7	37.8	54.0	15.1	55.5	18.9	15.7	13.3	91.4
40	0400	58.7	60.3	71.4	127.0	69.7	37.8	54.0	15.1	55.5	18.9	15.7	14.3	95.7
43	0430	61.1	63.0	74.1	133.4	69.7	37.8	54.0	15.1	55.5	18.9	15.7	14.3	98.4
45	0450	61.1	63.0	74.1	133.4	69.7	37.8	54.0	15.1	55.5	18.9	15.7	14.3	98.4
48	0480	64.7	66.7	74.1	133.4	69.7	37.8	54.0	15.1	55.5	18.9	15.7	14.3	98.4
50	0500	67.9	70.0	76.6	139.7	75.3	40.7	58.7	27.0	60.3	19.7	16.5	14.3	101.6
53	0530	71.1	73.0	85.3	148.8	75.3	40.7	58.7	15.1	60.3	19.7	16.5	17.4	113.5
55	0550	72.9	75.0	85.3	148.8	75.3	40.7	58.7	15.1	60.3	19.7	16.5	17.4	113.5
58	0580	74.2	76.2	88.5	165.1	75.3	40.7	58.7	15.1	60.3	19.7	16.5	17.4	116.0
60	0600	77.4	79.4	91.7	165.1	77.8	43.6	62.6	15.9	64.2	18.3	15.2	17.4	119.9
63	0630	83.8	85.7	98.8	171.5	75.7	43.6	65.1	15.9	66.7	13.8	10.6	17.4	127.0
65	0650	83.8	85.7	98.8	171.5	75.7	43.6	65.1	15.9	66.7	13.8	10.6	17.4	127.0
68	0680	90.2	92.1	103.2	171.5	78.4	41.3	63.5	15.9	65.1	18.1	14.9	17.4	131.3
70	0700	90.2	92.1	103.2	171.5	78.4	41.3	63.5	15.9	65.1	18.1	14.9	17.4	131.3
75	0750	98.1	99.9	113.5	196.9	78.4	45.4	65.1	17.4	66.7	16.5	13.4	20.6	145.3
80	0800	102.2	104.8	116.8	189.0	80.2	40.5	63.8	*	66.9	18.0	14.8	20.6	148.5
85	0850	107.9	111.1	123.2	206.4	80.2	40.5	65.1	*	68.3	18.3	15.1	20.6	154.8
90	0900	114.3	117.5	129.5	212.7	80.2	40.5	65.1	*	68.3	18.3	15.1	17.4	158.8
95	0950	117.5	120.0	132.1	222.3	80.2	40.5	65.1	*	68.3	18.3	15.1	17.4	172.0
100	1000	123.8	127.0	139.7	228.6	80.2	40.5	65.1	*	68.3	18.3	15.1	20.6	171.7
105	1050	127.0	130.2	142.9	228.6	80.2	40.5	65.1	*	68.3	18.3	15.1	20.6	174.9
110	1100	136.5	139.7	152.4	241.3	80.2	40.5	65.1	*	68.3	18.3	15.1	20.6	184.4
115	1150	136.5	139.7	152.4	241.3	80.2	40.5	65.1	*	68.3	18.3	15.1	20.6	184.4
120	1200	142.9	146.1	160.4	263.5	80.2	40.5	65.1	*	68.3	18.3	15.1	20.6	192.4
125	1250	155.6	158.8	184.4	304.8	91.7	91.4	77.3	*	80.5	17.6	14.4	20.6	254.0
130	1300	161.9	165.1	190.8	311.2	91.7	91.4	77.3	*	80.5	17.6	14.4	20.6	260.4
135	1350	168.3	171.5	203.2	322.3	91.7	91.4	77.3	*	80.5	17.6	14.4	23.8	266.7
140	1400	168.3	171.5	203.2	322.3	91.7	91.4	77.3	*	80.5	17.6	14.4	23.8	266.7

*L56 not applicable. Refer to L23 for sizes over 75mm.

CUT LINE FOR SHORT PAGE

TYPE 5610/5610Q

UNIVERSAL CARTRIDGE™ Single O-Ring Seals

Materials of Construction

SEAL COMPONENTS	MATERIALS	
Description	**Standard**	**Options**
Face/Primary Ring	Resin-Impregnated Carbon	Sintered Silicon Carbide Nickel Binder Tungsten Carbide
Seat/Mating Ring	Sintered Silicon Carbide	Nickel Binder Tungsten Carbide
Sleeve Gland Plate Collar Retainer Drive Ring Anti-Extrusion Ring	316 Stainless Steel	Alloy 20CB3 SS (UNS N8020) Alloy C-276 (UNS N10276) Titanium
O-Ring	Fluoroelastomer Ethylene Propylene	Perfluoroelastomer Buna-N Neoprene
Gland Gasket	Glass-Filled PTFE	—
Spring	Alloy C-276 (UNS N10276)	—
Quench Bushing (5610Q)	Resin-Impregnated Carbon	—

CUT LINE FOR SHORT PAGE

Application Criteria

The Type 5610 and 5610Q Cartridge seals may be customized for specific installations after review and evaluation by John Crane Engineering. The following data is needed to evaluate the proposed service:

- Make and Model of Equipment
- Shaft or Sleeve OD
- Seal Cavity Dimensions
- Speed
- Quench Fluid (if applicable)
- Process Fluid
  - Specific Gravity
  - Box Pressure
  - Vapor Pressure
  - Temperature
  - Viscosity

TYPE 5610/5610Q

UNIVERSAL CARTRIDGE™ Single O-Ring Seals

John Crane

North America
Morton Grove, Illinois USA

Tel: 1-847-967-2400
Fax: 1-847-967-3915
1-800-SEALING

Europe, Middle East, Africa
Slough, UK

Tel: 44-1753-224000
Fax: 44-1753-224224

Latin America
São Paulo, Brazil

Tel: 55-11-3049-9900
Fax: 55-11-3849-8270

Asia Pacific
Singapore

Tel: 65-222-9161
Fax: 65-223-5085

For your nearest John Crane facility, please contact one of the locations above.

If the products featured will be used in a potentially dangerous and/or hazardous process, your John Crane representative should be consulted prior to their selection and use. In the interest of continuous development, John Crane Companies reserve the right to alter designs and specifications without prior notice. It is dangerous to smoke while handling products made from PTFE. Old and new PTFE products must not be incinerated.

©2001 John Crane Print 2/01