TYPE RRA/RRE

O-Ring, Engineered Cartridge Seals

A – Face/Primary Ring
B – Seat/Mating Ring
C – Sleeve
D – Spring

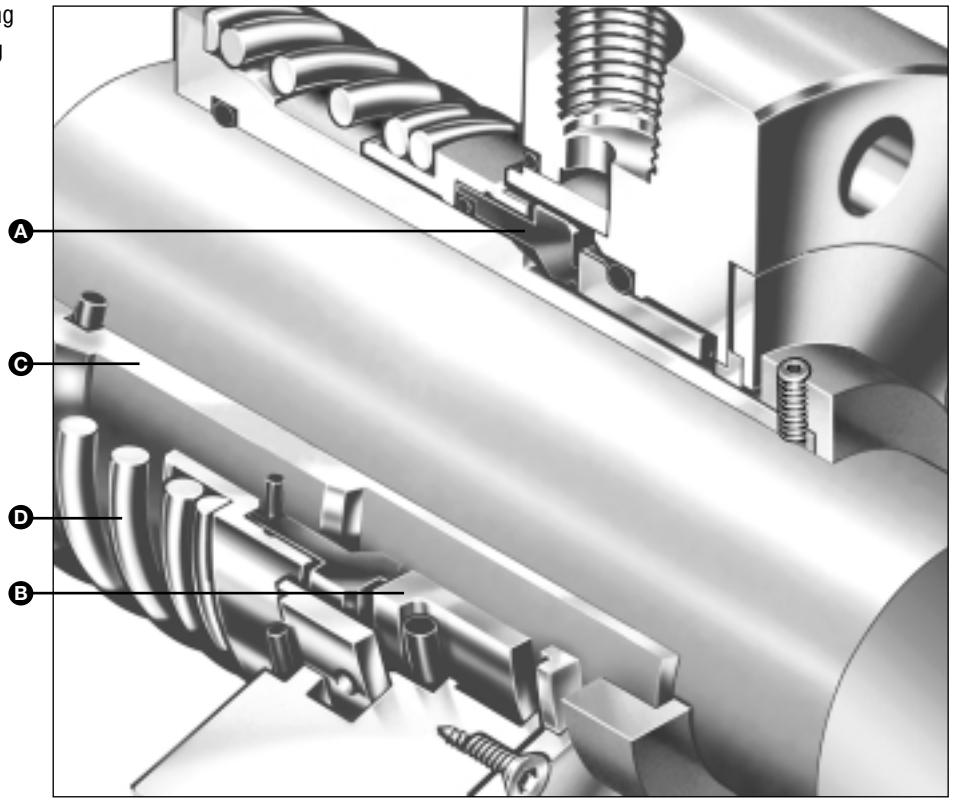

Seal Type RREL/R shown

Product Description

The RRAL/RRAR and RREL/RRER are balanced single-spring, engineered cartridge seals used for general duty and process industry applications.

These seals use standard components and are engineered for individual applications. In addition, the RREL/R is ideally suited for use on light hydrocarbons. The unique single-spring drive eliminates the requirement for keys and pins that can fret, has greater tolerance to misalignment and setting, and is more resistant to corrosion.

RRA and RRE seals use a unique drive spring arrangement with the selection of left or right hand spring dependent on the direction of pump rotation.

- RREL/R and RRAL/R meet API 610 requirements.
- RREL/R is qualification tested to API 682 for hydrocarbons and light hydrocarbons. RRAL/R is API 682 qualified for aqueous and hydrocarbon duties.
- RRAL/R is dimensionally interchangeable with the RROL/R and can be used to upgrade the seal.

Design Features

- Soft Start, Single-Spring Drive
- Universal Cavity for Secondary Seal Options
- Anti-Distortion Rotary Face
- External Drive Cartridge Design
- Multipoint Injection (Standard on RREL/R)

Performance Capabilities

- Temperature:
  -40˚C to 260˚C/-40˚F to 500˚F
- Pressure:
  Vacuum to 70 bar g/1015 psig
- Speed:
  Up to 4500 rpm
- Axial Movement Tolerance:
  ±3.00mm/0.118"

TYPE RRA/RRE

O-Ring, Engineered Cartridge Seals

Type RRAL/R Typical Arrangement

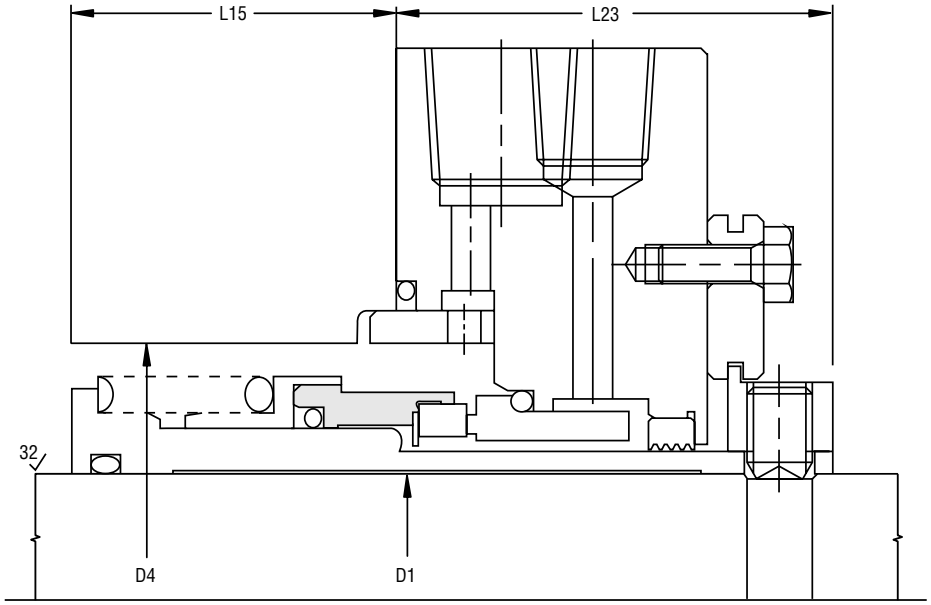

Type RREL/R Typical API 682 Type A Arrangement

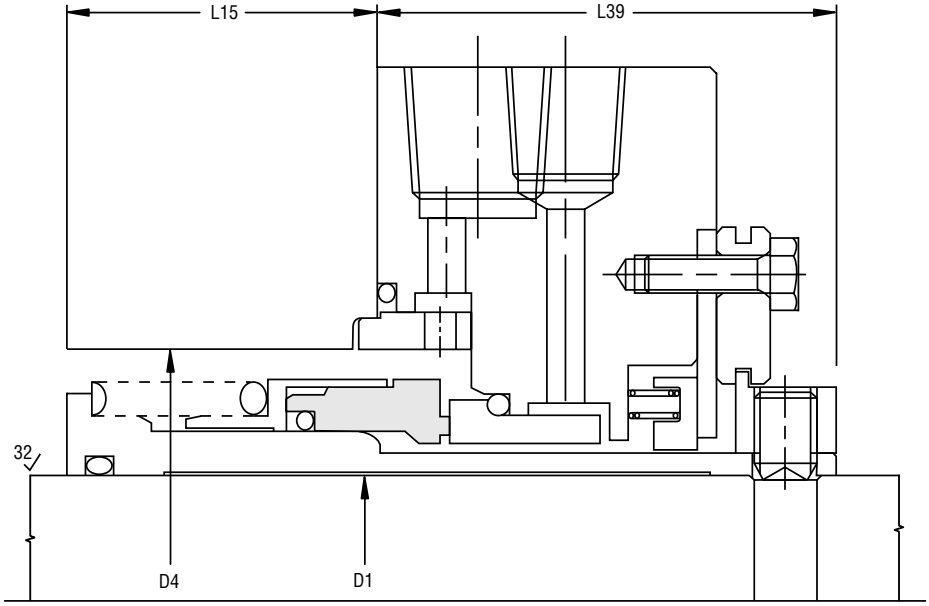

TYPE RRA/RRE

O-Ring, Engineered Cartridge Seals

Type RRAL/R and RREL/R Dimensional Data (mm)

Seal Size (mm)	D1 +0.00/-0.05	D4*	L15 Min.	L23*	L39**
020A	15	41	27.0	61.5	70.5
022A	18	44	28.5	61.5	70.5
025A	21	48	33.5	61.5	70.5
028A	25	50	34.5	61.5	70.5
032A	29	56	40.5	62.5	71.5
036A	33	61	42.5	62.5	71.5
040A	38	66	42.5	62.5	71.5
045A	43	73	44.5	69.5	78.5
050A	46	78	44.5	69.5	78.5
053A	49	81	47.5	69.5	78.5
056A	53	85	50.5	69.5	78.5
060A	56	90	50.5	69.5	78.5
063A	60	93	53.5	69.5	78.5
067A	63	102	55.5	69.5	78.5
070A	68	107	55.5	69.5	78.5
075A	73	111	58.0	69.5	78.5
080A	78	118	58.0	69.5	78.5
085A	83	122	61.0	69.5	78.5
090A	88	127	61.0	72.5	81.5
095A	93	134	64.0	72.5	81.5
100A	98	141	65.5	72.5	81.5
105A	103	149	66.5	75.5	84.5
110A	108	152	67.0	78.5	87.5
115A	113	159	70.0	78.5	87.5
120A	118	164	70.0	78.5	87.5
125A	123	174	77.0	78.5	87.5
130A	128	179	76.5	78.5	87.5
135A	133	186	81.5	78.5	87.5
140A	138	191	81.5	78.5	87.5
145A	143	196	85.5	78.5	87.5

Type RRAL/R and RREL/R Dimensional Data (inches)

Seal Size (inches)	D1 +0.000/-0.002	D4*	L15 Min.	L23*	L39**
020A	0.60	1.61	1.06	2.42	2.77
022A	0.72	1.73	1.12	2.42	2.77
025A	0.84	1.89	1.32	2.42	2.77
028A	1.00	1.97	1.36	2.42	2.77
032A	1.16	2.20	1.59	2.45	2.82
036A	1.30	2.40	1.67	2.45	2.82
040A	1.50	2.60	1.67	2.45	2.82
045A	1.70	2.90	1.75	2.72	3.08
050A	1.81	3.07	1.75	2.72	3.08
053A	1.93	3.19	1.87	2.72	3.08
056A	2.10	3.35	2.00	2.72	3.08
060A	2.20	3.54	2.00	2.72	3.08
063A	2.36	3.66	2.11	2.72	3.08
067A	2.48	4.02	2.20	2.72	3.08
070A	2.68	4.21	2.20	2.72	3.08
075A	2.87	4.37	2.28	2.72	3.08
080A	3.07	4.65	2.28	2.72	3.08
085A	3.27	4.80	2.40	2.72	3.08
090A	3.46	5.00	2.40	2.84	3.20
095A	3.66	5.28	2.52	2.84	3.20
100A	3.86	5.55	2.58	2.84	3.20
105A	4.06	5.87	2.62	2.97	3.34
110A	4.25	5.98	2.64	3.09	3.44
115A	4.45	6.26	2.76	3.09	3.44
120A	4.65	6.46	2.76	3.09	3.44
125A	4.84	6.85	3.03	3.09	3.44
130A	5.04	7.05	3.01	3.09	3.44
135A	5.24	7.32	3.21	3.09	3.44
140A	5.43	7.52	3.21	3.09	3.44
145A	5.63	7.72	3.37	3.09	3.44

***D4** is the minimum seal chamber bore over the spring.

***L23** is the standard seal gland plate width with a standard safety bushing.

****L39** is the standard seal gland plate width for seals with a floating carbon safety bushing as designed for API 682 applications.

TYPE RRA/RRE

O-Ring, Engineered Cartridge Seals

Basic Pressure Rating

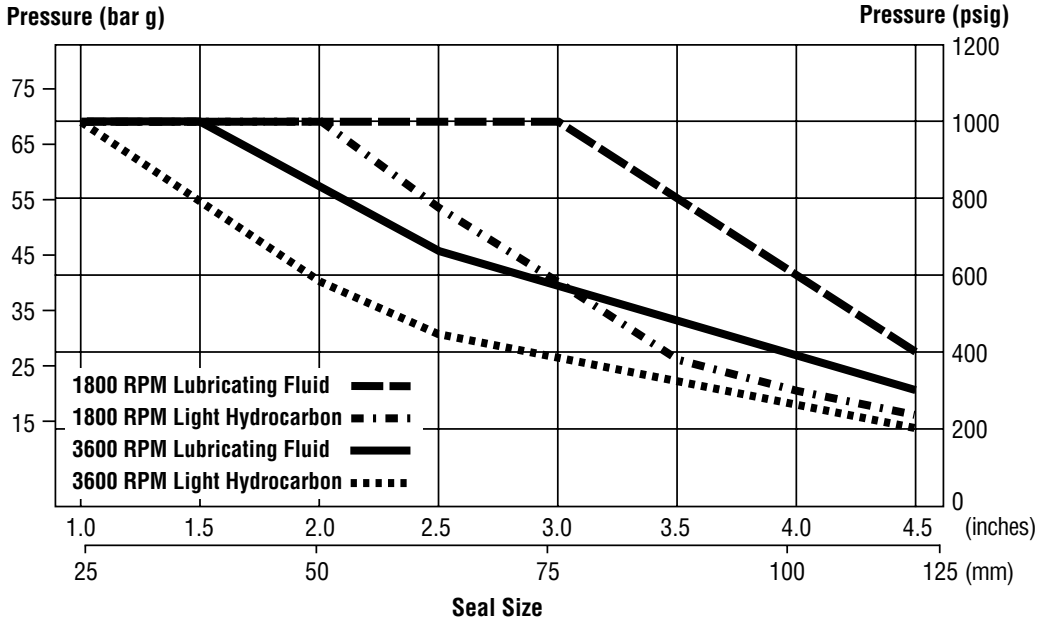

The Basic Pressure Rating is for a standard seal, as shown in the typical arrangement, when installed according to the criteria given in this data sheet and generally accepted industrial practices.

The Basic Pressure Rating assumes stable operation in a clean, cool, lubricating, non-volatile liquid with an adequate flush rate. Ratings are also shown for non-lubricating, volatile fluids. When used with the Multiplier Factors, the Basic Pressure Rating can be adjusted to provide a conservative estimate of the dynamic pressure rating. For process services outside this range and sizes above 4.50" or for a more accurate assessment of the dynamic pressure rating, contact John Crane for more information.

Multiplier Factors

	Selection Considerations	Multiplier Factor	
		RREL/R	RRAL/R
Sealed Fluid Lubricity	Petrol/Gasoline, Kerosene, or Better Water and Aqueous Solutions Flashing Hydrocarbons	x 1.00 x 0.75 refer curve	x 1.00 x 0.75 use RRE
Sealed Fluid Temperature (for carbon only)	Up to 80°C/175°F From 80°C to 120°C/175°F to 250°F From 120°C to 180°C/250°F to 355°F Above 180°C/350°F	x 1.00 x 0.90 x 0.80 x 0.65	x 1.00 x 0.80 x 0.70 x 0.55

Example for Determining Pressure Rating Limits:

Seal: 50mm/2" diameter Type RREL/R

Product: Propane Butane (s.g. 0.50)

Face Materials: Carbon vs. Silicon Carbide

Operating Temperature: 43°C/110°F

Speed: 3600 rpm

The maximum operating pressure for this application is:
40 bar g/580 psig at 3600 rpm.

CUT LINE FOR SHORT PAGE

TYPE RRA/RRE

O-Ring, Engineered Cartridge Seals

RRA/RRE Hydrostatic/Static Pressure Limits

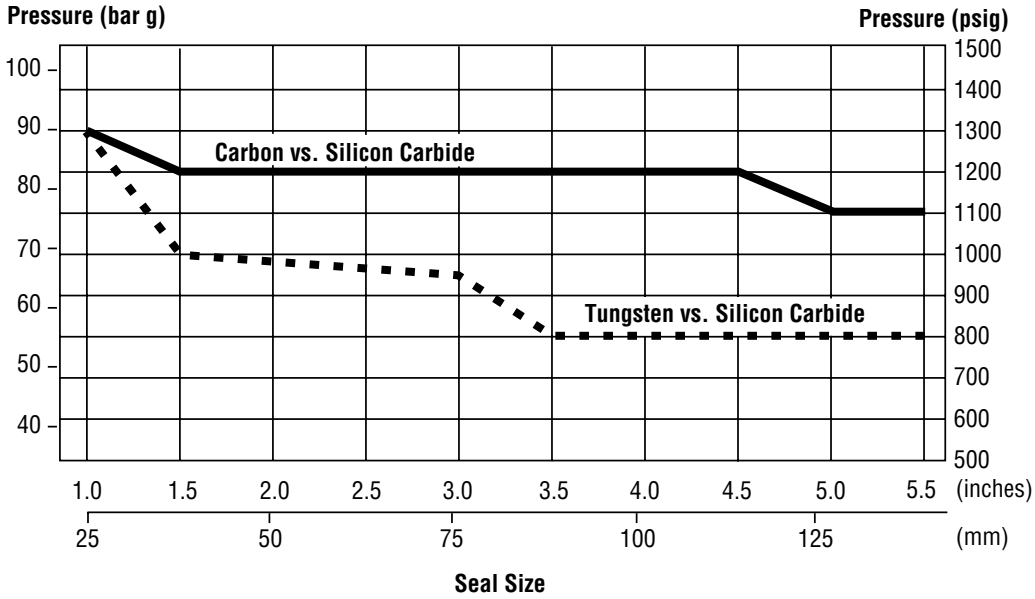

NOTE: The hydrostatic and static limits are based upon o-ring extrusion limits, not component stresses. Therefore, hydrostatic and static limits are the same.

Speed Limits

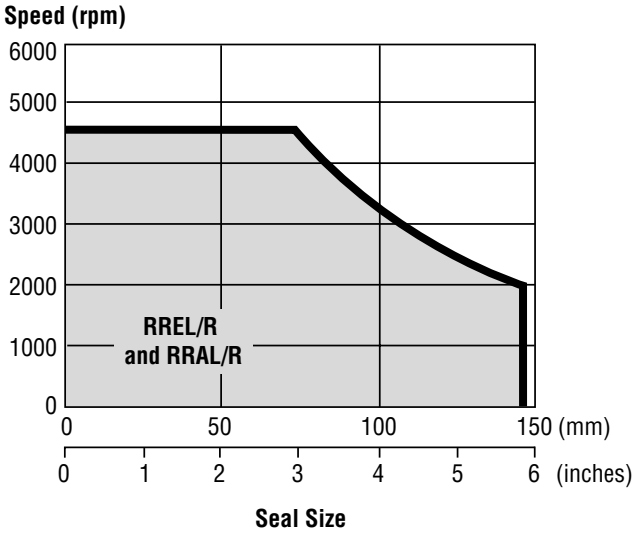

CUT LINE FOR SHORT PAGE

TYPE RRA/RRE

O-Ring, Engineered Cartridge Seals

Materials of Construction

SEAL COMPONENTS	RRAL/R		RREL/R	
Description	**Standard**	**Options**	**Standard**	**Options**
Face/Primary Ring	Silicon Carbide in Duplex Stainless Steel (UNS S31803)	—	Carbon Graphite	—
Seat/Mating Ring	Carbon Graphite	Nickel Binder Tungsten Carbide	Silicon Carbide	Nickel Binder Tungsten Carbide
Metal Components	316 Stainless Steel	Duplex Stainless Steel	316 Stainless Steel	Duplex Stainless Steel
Spring	316 Stainless Steel	Alloy C-276 (UNS N10276) Alloy 400	316 Stainless Steel	Alloy C-276 (UNS N10276) Alloy 400
O-Rings	Nitrile Ethylene Propylene Fluorocarbon Perfluoroelastomer	PTFE*	Nitrile Ethylene Propylene Fluorocarbon Perfluoroelastomer	PTFE*

*Refer to John Crane

John Crane

North America
Morton Grove, Illinois USA
Tel: 1-847-967-2400
Fax: 1-847-967-3915
1-800-SEALING

Europe, Middle East, Africa
Slough, UK
Tel: 44-1753-224000
Fax: 44-1753-224224

Latin America
São Paulo, Brazil
Tel: 55-11-3049-9900
Fax: 55-11-3845-8270

Asia Pacific
Singapore
Tel: 65-222-9161
Fax: 65-223-5035

TI Group
Global Specialised Engineering

For your nearest John Crane facility, please contact one of the locations above.

If the products featured will be used in a potentially dangerous and/or hazardous process, your John Crane representative should be consulted prior to their selection and use. In the interest of continuous development, John Crane Companies reserve the right to alter designs and specifications without prior notice. It is dangerous to smoke while handling products made from PTFE. Old and new PTFE products must not be incinerated.

©2000 John Crane Print 9/00