Non-Contacting Bellows Seal for Cryogenic Applications

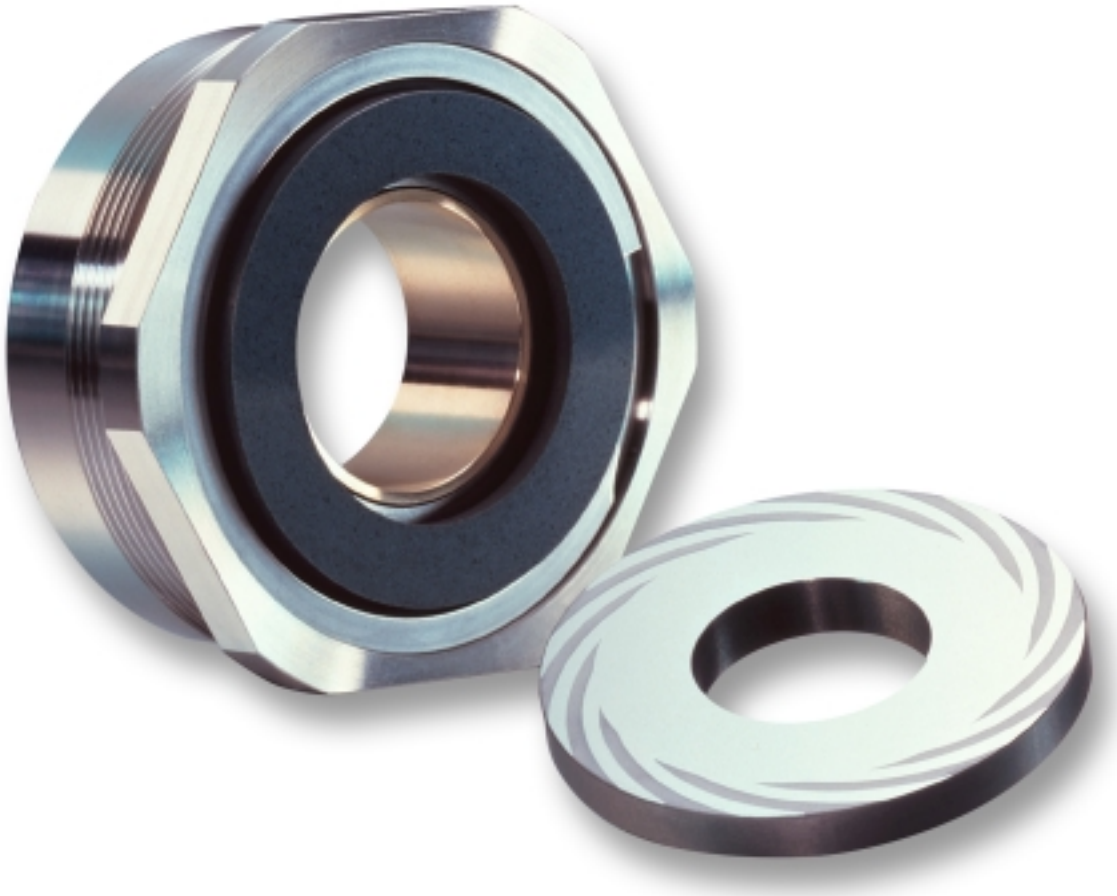

Type 285

Non-Contacting Sealol® Metal Bellows Seal

Type 285

Non-Contacting Sealol Metal Bellows Seal

The Type 285 seal is the first non-contacting welded metal bellows seal to be applied to cryogenic applications. John Crane's expertise in non-contacting technology (US patent number 4,889,348), combined with a specially designed Sealol bellows, ensures high performance, even in the toughest cryogenic applications.

Unique Spiral Groove Technology

As the worldwide leader in spiral groove technology, John Crane is the first to utilize non-contacting seals in cryogenic applications. The John Crane spiral grooves enable the seal to operate on a gas film by gathering and compressing the vaporized liquid. As the gas is forced towards the closed groove ends, the pressure rises, which creates a cushion to separate the sealing faces. Since the seal faces do not contact, dry-running and face wear problems, which are associated with conventional contacting seals, are virtually eliminated.

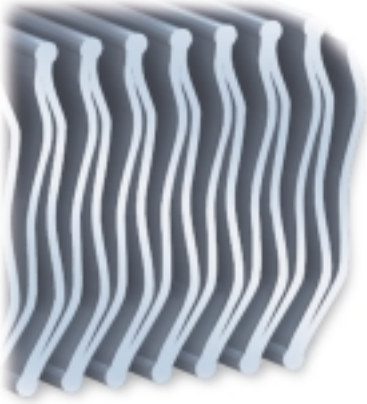

Sealol Bellows Design

Since the 1960s, our metal bellows experience in diverse industries, such as oil and gas, chemical, pulp and paper, municipalities, utilities, pharmaceutical, and food processing, has proven the soundness of Sealol's welded metal bellows design. Extensive computer modeling and testing have assured the bellows' performance through all operating parameters. Consequently, the metal bellows design enhances the Type 285 seal reliability.

Applications

The Type 285's compact design fits most popular cryogenic pumps without modification. It is available in various seal housing arrangements: flanged and left- or right-hand-threaded.

The design and materials of construction meet the industry safety requirements, allowing the Type 285 to seal all of the common industrial liquid gases, including:

- Oxygen,
- Nitrogen, and
- Argon.

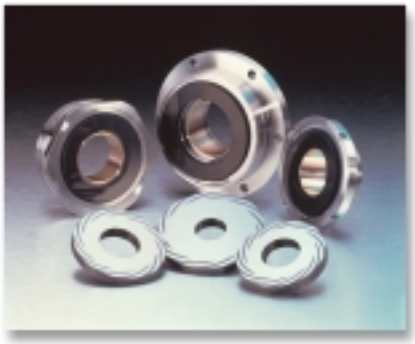

Sealol® is a registered trademark of John Crane.

Floating Stator and Stationary Bellows

The floating carbon face, combined with a stationary bellows, provides for very reliable face alignment, especially during pump start-up. The positive stator drive eliminates failures associated with torsional fatigue of the bellows.

Housing Versatility

The Type 285 seal is available with three seal housing designs: flanged and left- or right-hand-threaded. To simplify installation, a fitting tool can be provided to help thread the seal into the pump housing.

Non-Contacting Spiral Grooved Rotor

The Type 285 operates on a cushion of gas created at the seal interface. The spiral groove compresses the gas and causes the seal faces to separate.

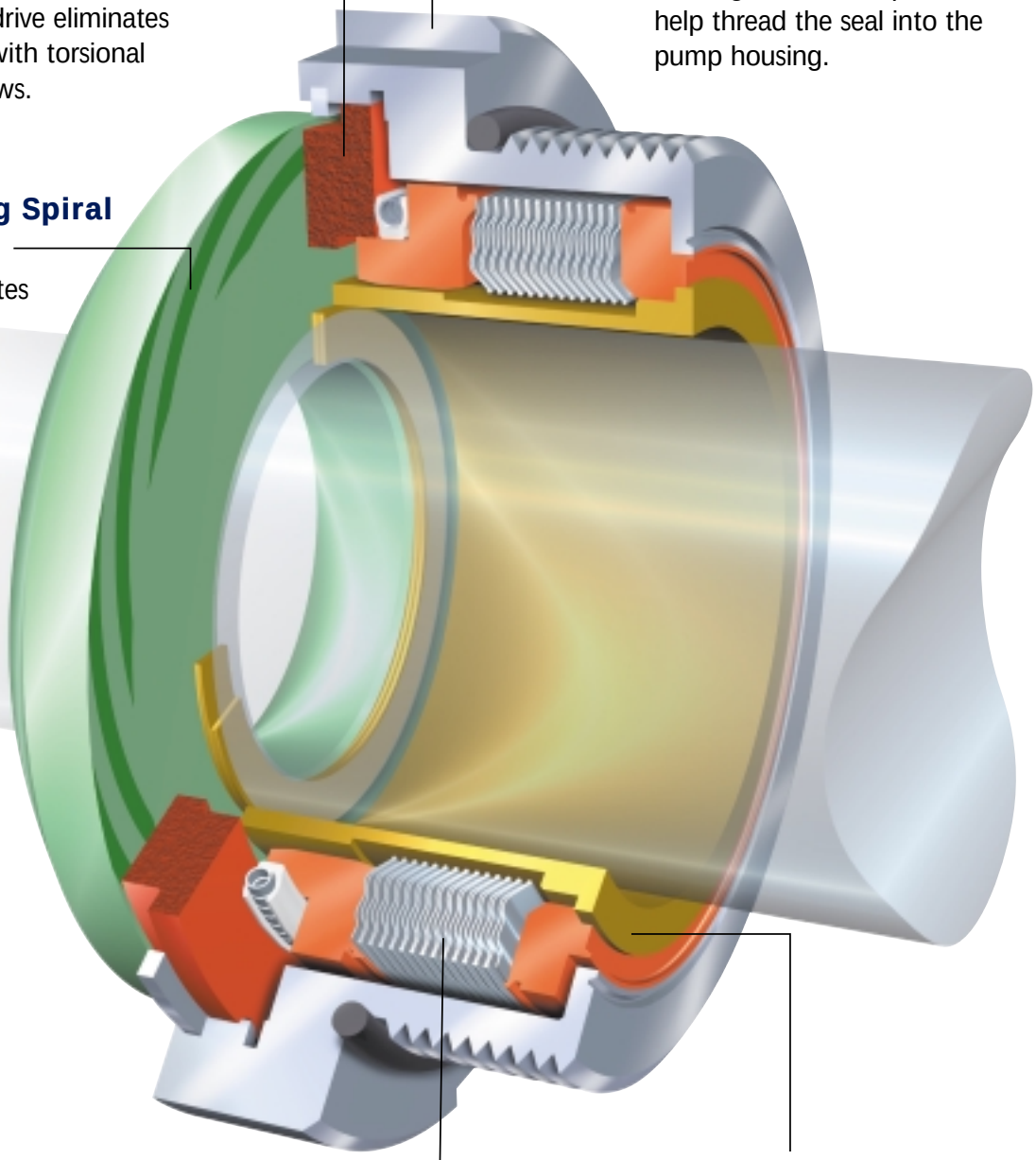

Sealol Bellows

The Type 285 seal incorporates a specially designed welded metal bellows, ensuring dependable performance across all operating conditions.

Antispark Sleeve

The Type 285 sleeve is made of a special grade of tin bronze with antisparking characteristics. This enables you to operate safely in liquid oxygen service.

Rotating Parts

Stationary Parts

Materials of Construction

- Stator: Carbon
- Spiral Groove Rotor: Tungsten Carbide
- Metal Bellows: Alloy 718 (Alloy 625 End Fittings)
- Housing: 316L Stainless Steel
- Spring-Energized Seal: Virgin PTFE, Cobalt-Chrome Alloy Spring
- Antispark Sleeve: Tin Bronze
- Retaining Ring: Nickel-Copper Alloy
- Shims: Copper Alloy

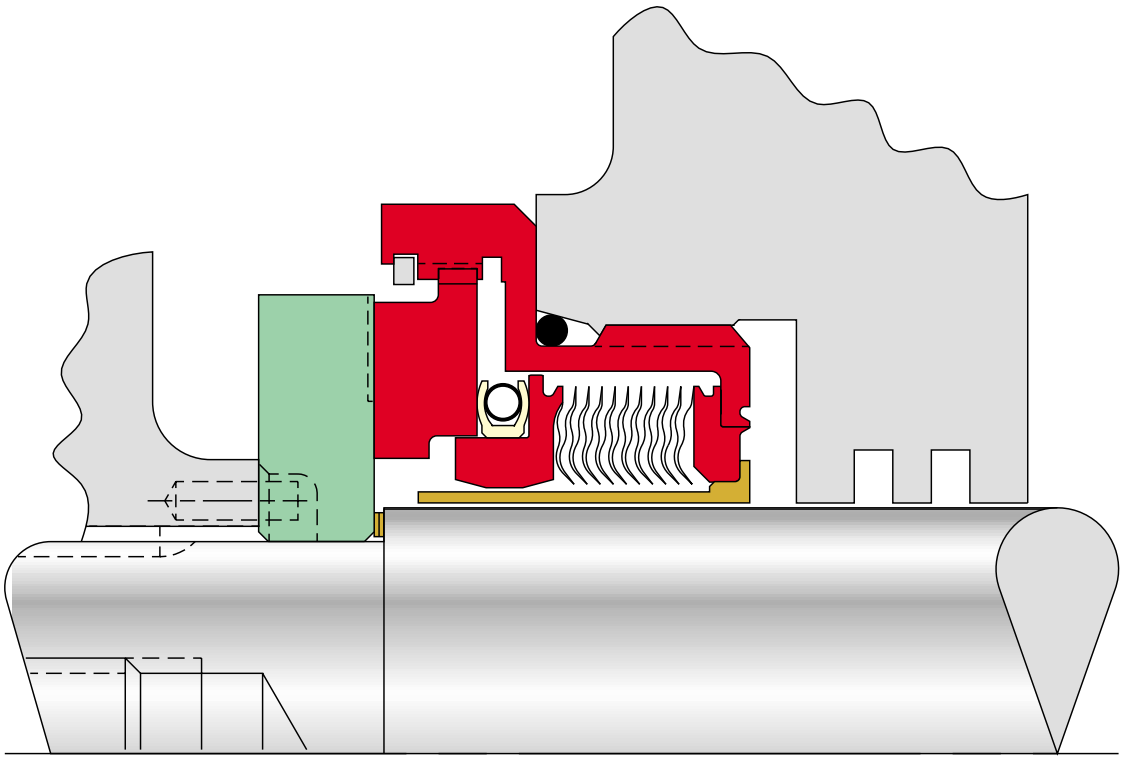

Performance Capabilities

- Process Pressure: Vacuum to 7 bar g/100 psig
- Process Temperature: -196°C/-320°F to ambient
- Shaft Speed: Up to 10,000 rpm

Rotating Parts

Stationary Parts

CUT LINE FOR SHORT PAGE

CUT LINE FOR SHORT PAGE

Features and Benefits of the Type 285 Seal

- Increases Mean Time Between Pump Maintenance (MTBPM)
- Lower maintenance costs (see table below)
- Eliminates seal face wear with non-contacting technology
- Compact design fits most standard cryogenic pumps
- Meets liquid oxygen safety requirements
- Antispark sleeve and snap ring
- More tolerant to system upsets
- Reduces power consumption
- Minimizes product loss

Type 285 Seal Value Added

Cost comparison between Type 285 and Conventional Contacting Seals:

Fleet of 25 Trucks	Seals	Average Seal Life	Failures per Year	Cost per Failure†	Cost per Year
Liquid Argon Liquid Nitrogen Liquid Oxygen	5 10 10	40 days 100 days 175 days	45 35 20	$1,500 $1,500 $1,500	$67,500 $52,500 $30,000
Conventional Contacting Seals	**25**		**100**		**$150,000**
Type 285 Seals	**25**	**365 days††**	**1**	**$2,000**	**$50,000**
					Total Savings for the First Year = $100,000

† Does not include truck downtime, product loss, maintenance operators' time, etc.
†† This is a conservative life expectancy.

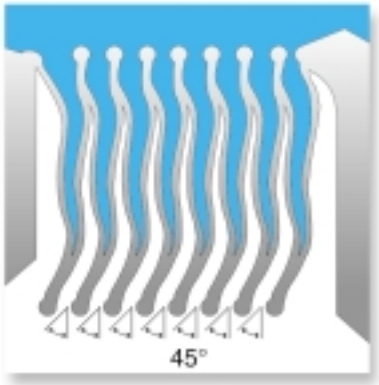

Type 285 Bellows...Optimized Design

Our unique 45° tilt angle design delivers dependable and reliable service by effectively distributing stresses away from the inside diameter welds of the bellows' plates. The tilt angle and plate design give the bellows' core rigidity and uniform stress distribution.

John Crane

North and Latin Americas
Morton Grove, Illinois USA

Tel: 1-847-967-2400
Fax: 1-847-967-3915
1-800-SEALING

Europe, Middle East, Africa
Slough, UK

Tel: 44-1753-224000
Fax: 44-1753-224224

Asia Pacific
Singapore

Tel: 65-222-9161
Fax: 65-223-5035

TI Group
Global Specialised Engineering

For your nearest John Crane facility, please contact one of the locations above.

If the products featured will be used in a potentially dangerous and/or hazardous process, your John Crane representative should be consulted prior to their selection and use. In the interest of continuous development, John Crane Companies reserve the right to alter designs and specifications without prior notice. It is dangerous to smoke while handling products made from PTFE. Old and new PTFE products must not be incinerated.

©1999 John Crane Print 5/99