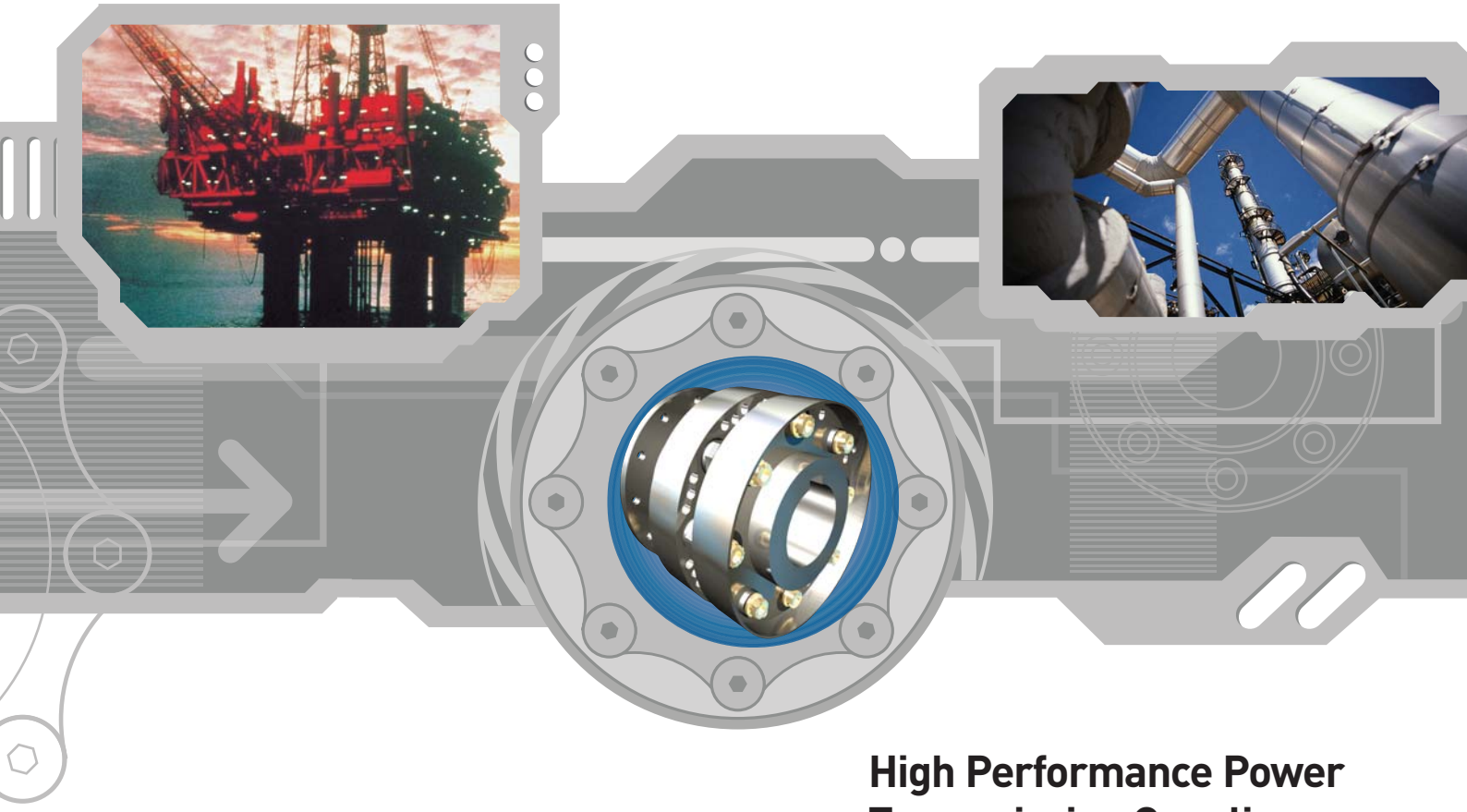

High Performance Power Transmission Couplings

smiths
bringing technology to life

METASTREAM™

High Performance Power Transmission Couplings

High Performance Technology

Metastream® power transmission couplings provide the world's energy, process, and transport industries with the best in performance and reliability. As part of John Crane's continuous innovation and development process, Metastream high performance couplings, which have served the turbomachinery industries for over 35 years were re-evaluated, resulting in the H Series. Membrane options enable weight and flexibility to be optimised, and are readily adapted to "reduced moment" configurations. This gives turbomachinery manufacturers and end-users alike the confidence to specify Metastream as their first choice high performance coupling

Product Improvements

Taking design principles back to basics and using FEA with validation from intensive laboratory test work, John Crane have been able to push the boundaries to deliver the H Series coupling, a new breed of light weight, high performance coupling suitable to meet the demands of all Turbomachinery applications.

Metastream H Series high performance couplings offer:

- Reduced moment configurations
- Optional arrangements for larger diameter shafts and integral shaft flanges
- Unitised assembly for high standard of balance and utmost reliability
- Full compliance with ISO10441 (API 671) - no exceptions
- Built-in safety with emergency backup drive
- Shrouding bolts to minimise windage effect

Applications

Metastream H Series high performance couplings are widely specified for critical applications on:

- Turbo compressor machinery
- Turbine generator sets
- Marine turbine main propulsion
- Boiler feed pumps
- Development test stands

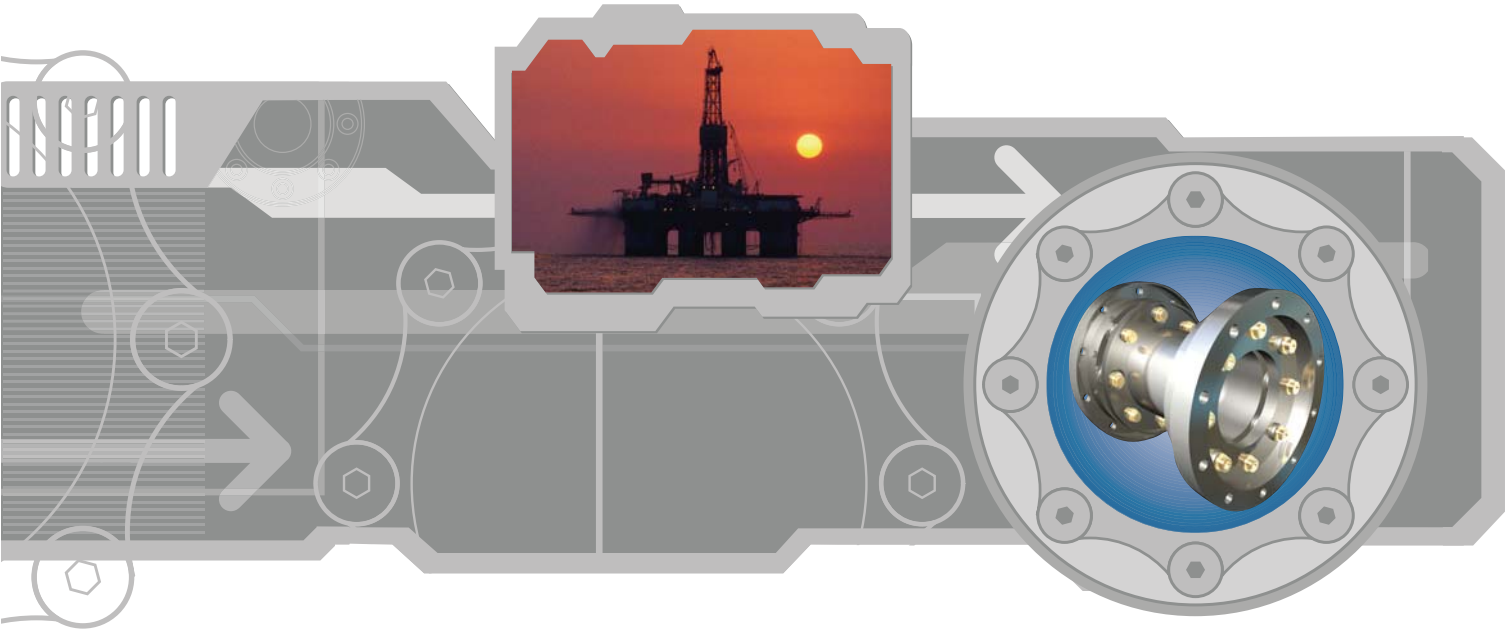

Your partner in productivity

Flexible Element Designs

Safety and reliability are essential for the operation of high speed turbomachinery. Attention to detail design and a careful choice of materials give Metastream couplings superior performance on demanding applications. Metastream standard disc material is AISI 301 stainless steel, specified for its combination of high strength and general corrosion resistance. For high temperature or corrosive applications, alternative materials, such as Inconel®, or special coated discs are available.

HS Series

6-bolt discs for maximum misalignment capacity. Ideal for applications where high thermal growth movements occur or where reaction forces on bearings must be kept to a minimum.

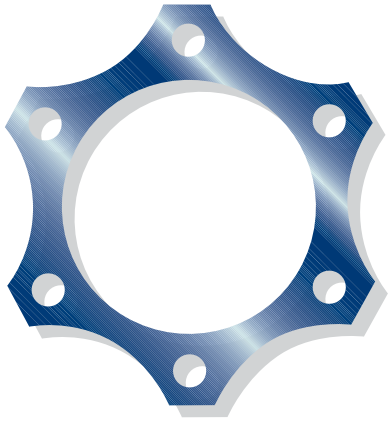

HL Series

8-bolt discs, the choice for most high speed applications. Combines high torque capacity and flexibility.

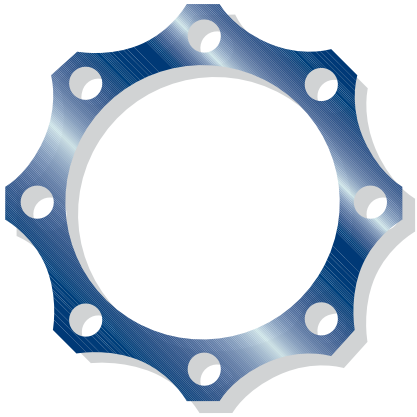

HT Series

10-bolt discs for higher torque capacity. Suited in particular to motor or generator drives with high peak torques and lower misalignment requirements and where low weight is paramount.

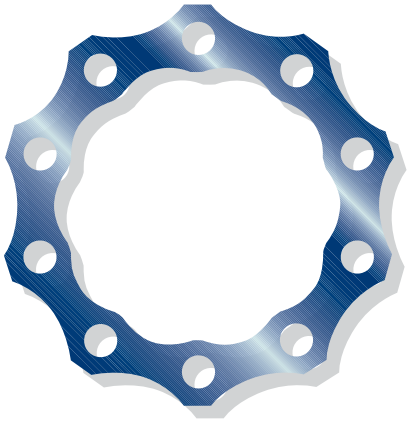

Inconel is a registered trademark of Special Metals Corporation.

High Performance Power Transmission Couplings

Standard Features

The standard Metastream high performance coupling designs incorporate important features for added safety on high speed turbomachinery.

- The Metastream overload collar arrangement on the main disc drive bolts provides extra load carrying capacity during transient or short circuit torque conditions. This reduces the peak stresses on the flexible elements, ensuring continuity of drive under emergency conditions.
- All Metastream high performance couplings are designed and manufactured to ensure the highest standard of dynamic balance. All mating parts use interference fits, which, with factory assembled transmission units ensure no relative movements during installation, operation, and any subsequent reassembly.

  Metastream component and assembly balance procedures and precision balancing machines assure compliance with ISO10441 (API 671) or similar specifications. Bolts and nuts are supplied weight balanced and on high speed couplings, trim balancing holes are incorporated
- The contoured disc profile eliminates redundant material and ensures optimum performance and low restoring forces.
- When the coupled machines use tapered shafts, Metastream high performance couplings are supplied with stainless steel shims for axial adjustment.
- All Metastream high performance couplings are supplied with transportation bolts and gag sleeves as standard. These bolts are also used to compress the flexible assembly as an aid to installation.

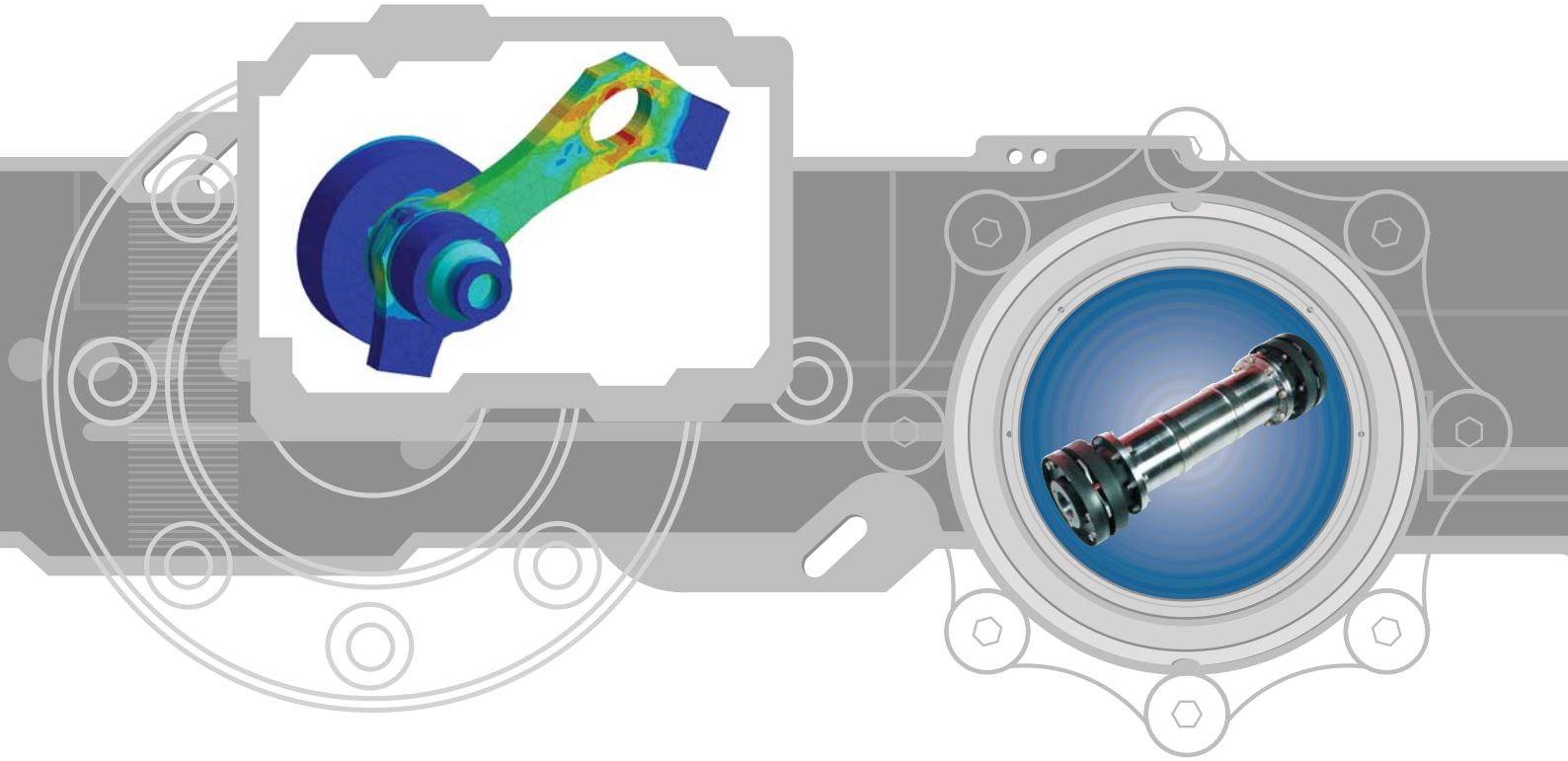

Proven performance...from proven products

H-FE Couplings (HSFE/HLFE/HTFE)

Metastream® **H-FE** Couplings feature a factory assembled transmission unit, providing high torque capacity with low weight. The hub bores possible with the design make this range particularly suitable for use on electric motor or generator drive applications, where larger shaft sizes are generally in use.

- The flanged **H-FE** transmission unit can be readily adapted to match the integral shaft flanges used on many large gas and steam turbines.
- On some applications, a **H-FE** turbine end drive is combined with a reduced moment arrangement at the compressor end.
- The transmission unit is simple to install and remove for rapid separation of the two machines, providing easy access for alignment and equipment maintenance.

H-RE and H-CE Couplings (HSRE/HLRE/HTRE/HSCE/HLCF)

Metastream® **H-RE** Reduced Moment Couplings use two factory assembled hub/flexible membrane units and a detachable spacer. This arrangement produces a high integrity coupling suited for most medium speed and high speed compressor drives.

Metastream® **H-CE** Couplings offer the lowest possible overhung moments, and additional shrouding of the flexible elements and bolts. This arrangement produces a high integrity coupling suited for most medium speed and high speed compressor drives.

- The factory assembled **H-RE/H-CE** hub/flex units are designed to accommodate typical machine shaft sizes for turbo compressor applications.
- The separate spacer on the **H-RE/H-CE** can be varied to provide the appropriate distance between shaft ends and the required torsional stiffness to suit individual applications.
- On some applications, the **H-RE/H-CE** hub assembly on a compressor or gearbox input shaft is combined with the flanged **H-FE** arrangement for a turbine driver.

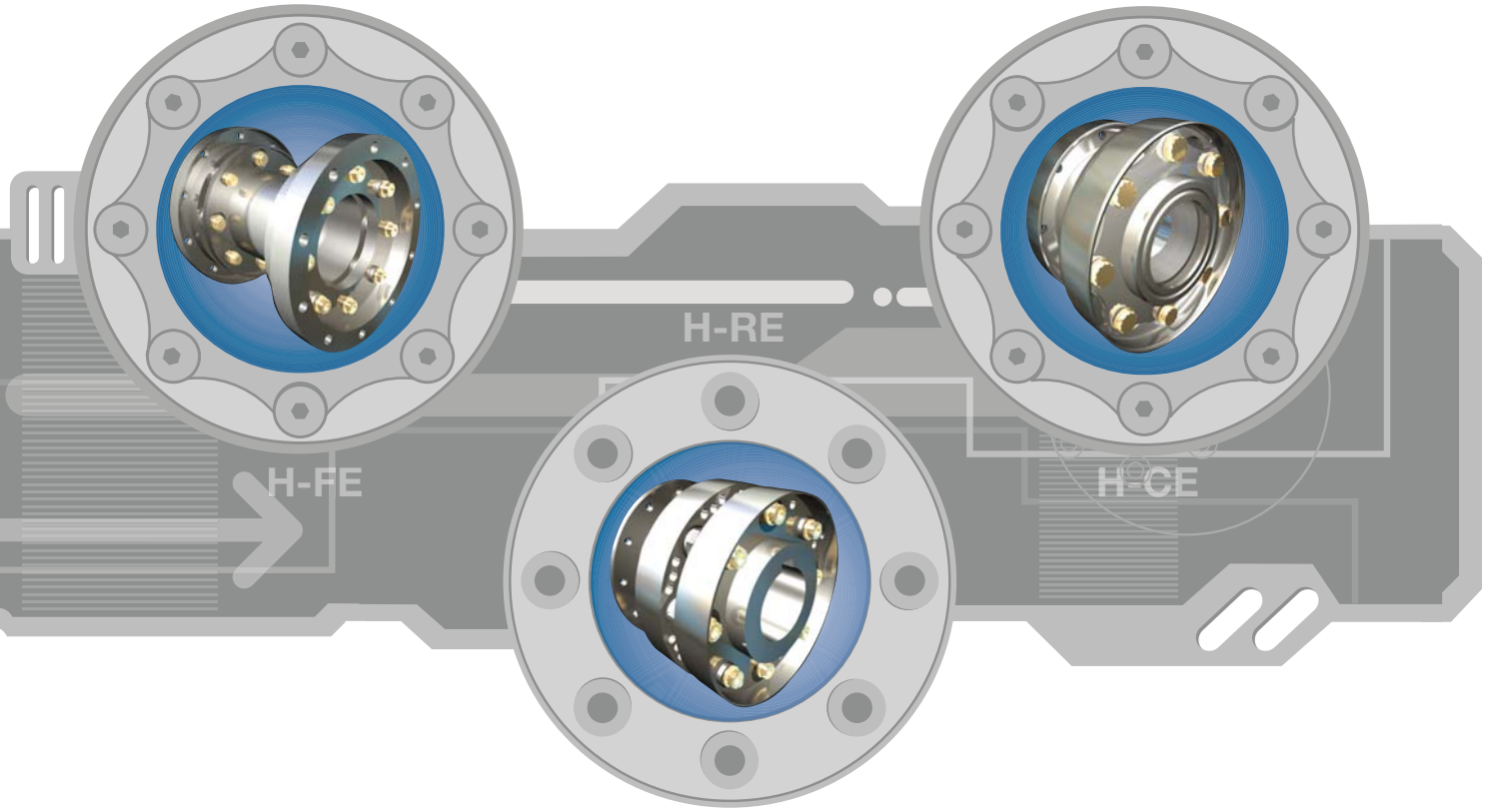

Design Options

Standard Options

Many applications for high performance couplings need special adaptation to suit customer-specific requirements. Metastream design and application engineers have the solutions for all your power transmission problems.

Backup Gear Drive

A backup gear drive can be configured into the coupling to allow a longer period before shutdown in the event of a failure.

Electrical Insulation

Electrical insulation can be specified on electric motor drives or turbine generator applications. We have supplied thousands of Metastream couplings with such insulation, including large 50MW turbine generator drives.

Spark resistant

Hazardous areas in refinery operations require spark resistant couplings. This can be achieved by simply replacing the overload collars with components manufactured from non ferrous metals.

Shrouded Design

Shrouding can be incorporated into the design to minimise windage losses normally associated with high speed machines.

Torque Limiting

Torque limiting devices are sometimes required on turbine generator and other applications. Shear pin designs have been used for many years with success. An alternative "hydraulic" torque limiter can also be supplied with your Metastream coupling. This hydraulic device can also simplify installation because tapered shafts and shrink fitting are not required.

Torque Measurement

Torque measurement is increasingly important for the monitoring of critical high performance machinery. Both phase displacement and strain gauge based systems can be readily incorporated into Metastream couplings. Numerous torque measurement couplings have been supplied for both continuous duty and test bed applications.

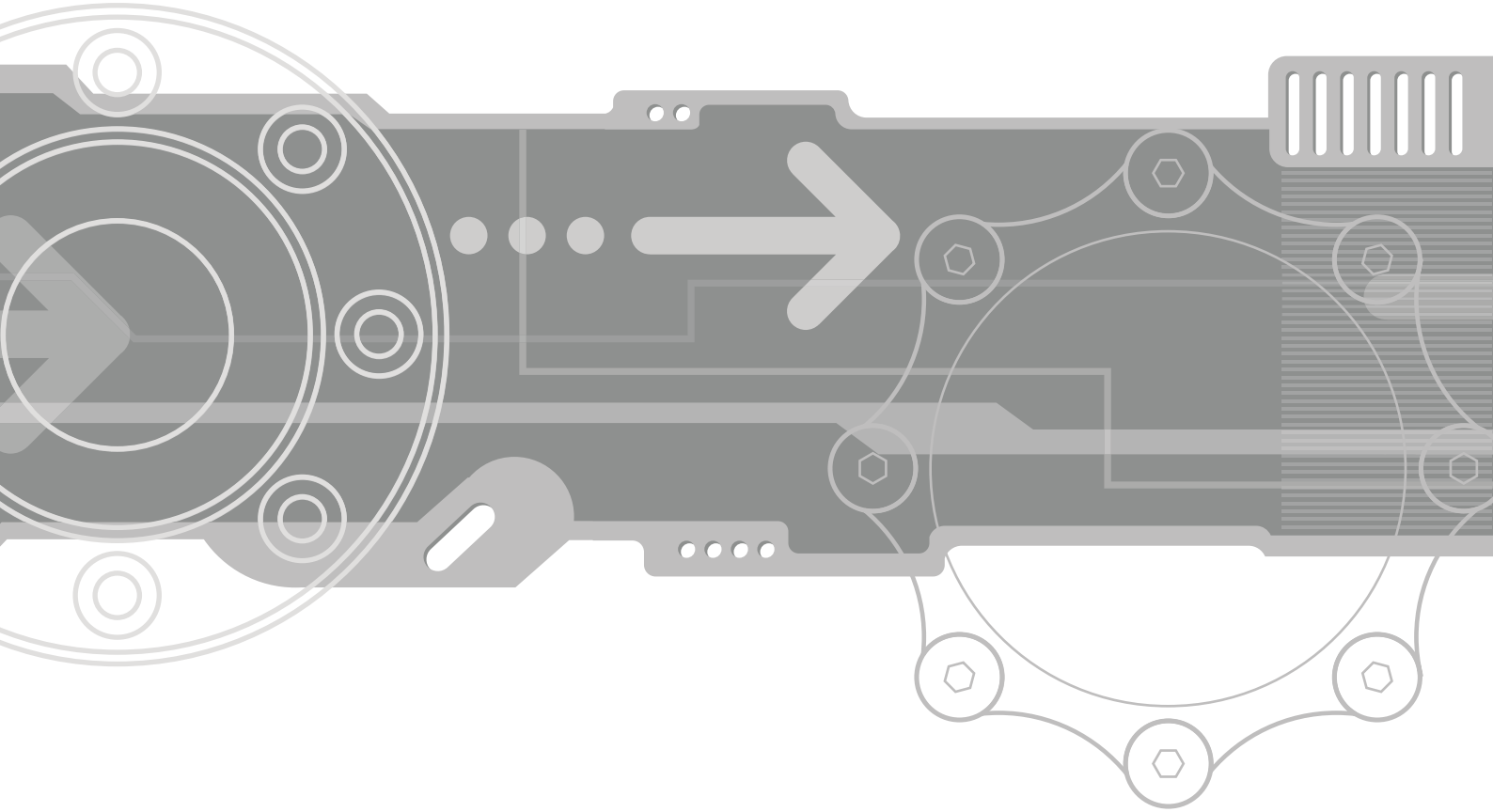

Brand Heritage

Metastream membrane couplings were first developed in the early ***1950's*** by Metaducts Ltd of Brentford, UK, to replace gear couplings on oil refinery pumps.

In these early days their portfolio consisted of the M Series spoke membrane coupling arrangement covered by a Patent filed 15th December ***1950***. Branded "Metastream", this name is now recognised world wide for both quality and reliability.

The British Navy adopted the M Series as the default selection for all turbine propulsion drives in ***1959***, with navies around the world soon following suit.

Acquired by Flexibox Ltd in ***1964***, investment in research and development lead to the introduction in ***1969*** of the T Series tangential link design. This coupling arrangement was universally accepted by the Oil & Gas industry both upstream and downstream and in ***1977*** it's features becoming incorporated in the API 610 standard.

The first "High Performance T Series" coupling was supplied in ***1970's*** to Turbomachinery OEM's and with its growing reputation in the market Metastream became the preferred supplier to European OEM's by the ***1990's***.

The M Series was reengineered in ***1985*** and improving on the key features which make this a unique design the resultant offering was a coupling with reduced weight, increased power rating and improved safety.

Acquired by John Crane in ***1998*** the development and rationalisation of the product range continued with the extension of the T Series with the introduction of the TL in ***2001*** has quickly become the preferred choice for larger API 610 applications. In ***2004*** a short DBSE axially split spacer coupling designed to replace gear couplings was introduced to the market 50+ years on from the original reason to develop the Metastream and still a real need in the market.

As part of John Crane's continuous improvement process, ***2006*** saw the overhaul Metastream high performance couplings, which have served the turbomachinery industries for more than 35 years.

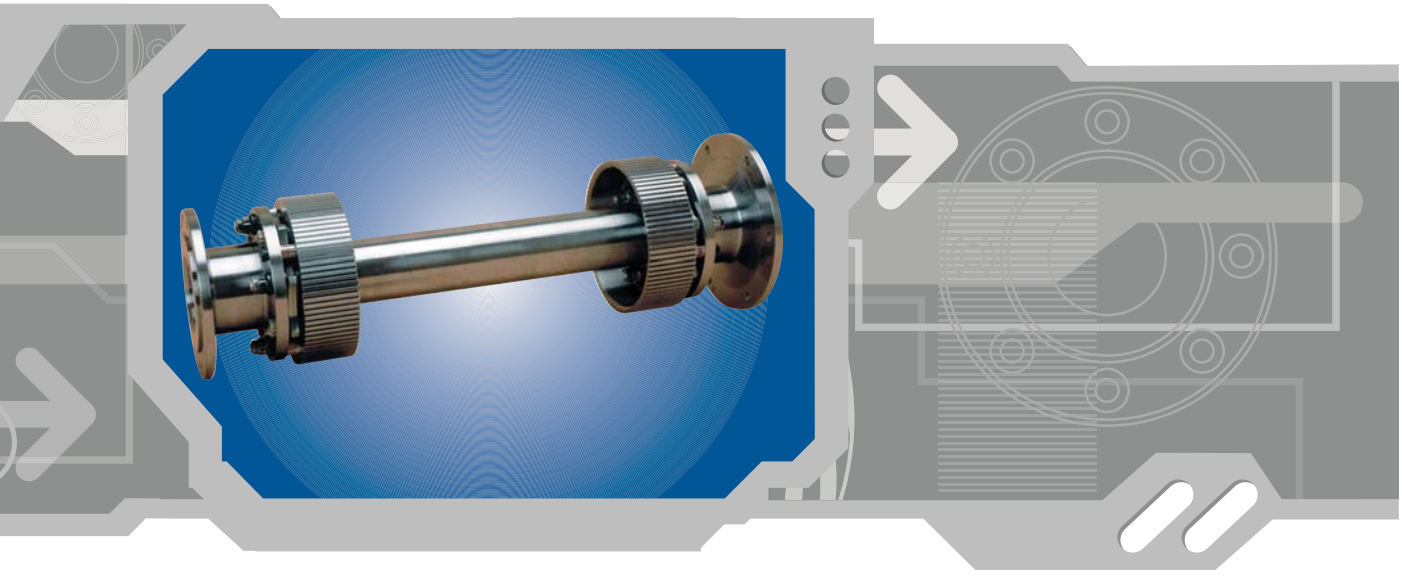

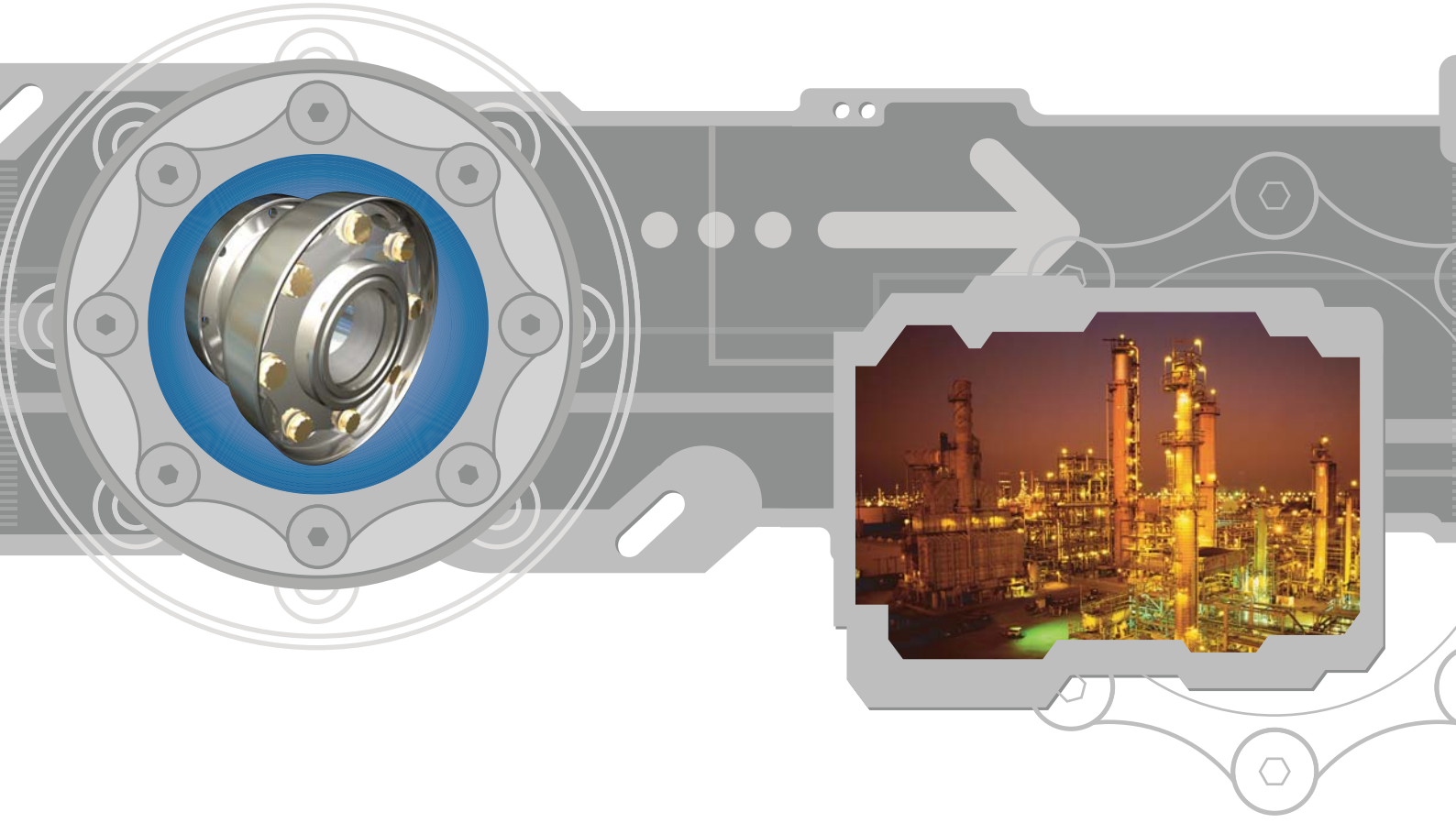

For your nearest John Crane facility, please contact one of the locations below.

Europe
Slough, UK
Tel: +44-1753-224000
Fax: +44-1753-224224

North America
Houston
Tel: +1-713-944-6690
Fax: +1-713-946-8252

Latin America
São Paulo, Brazil
Tel: +55-11-3371-2500
Fax: +55-11-3371-2599

Middle East & Africa
Dubai, United Arab Emirates
Tel: +97-1488-39510
Fax: +97-1488-37766

Asia Pacific
Singapore
Tel: +65-6512-5200
Fax: +65-6512-5233

If the products featured will be used in a potentially dangerous and/or hazardous process, your John Crane representative should be consulted prior to their selection and use. In the interest of continuous development, John Crane Companies reserve the right to alter designs and specifications without prior notice. ISO 9001, ISO 14001, ISO/TS 16949 Certified. Details available on request.

smiths
bringing technology to life

©2008 John Crane Print 01/08 www.metastreamcouplings.com

B-HSeriesEng