TYPE 5615/5615Q

UNIVERSAL CARTRIDGE™ Single Metal Bellows Seals

A – Seat/Mating Ring
B – Face/Primary Ring
C – Metal Bellows Seal Head
D – Sleeve
E – Gland

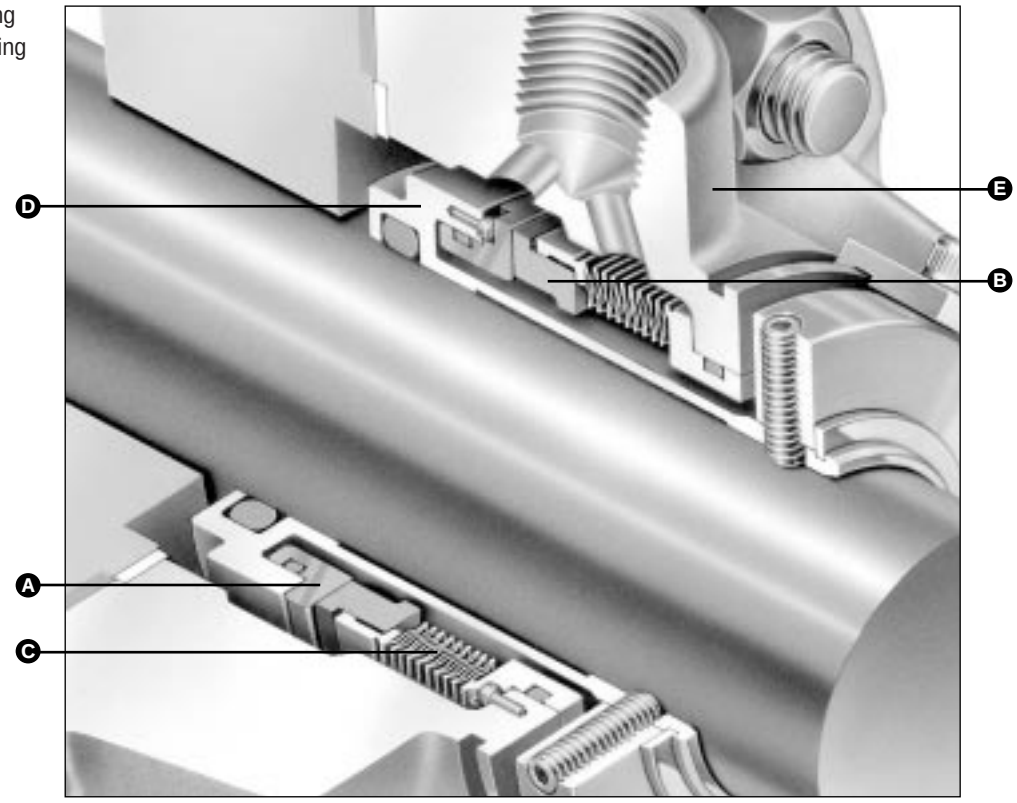

Product Description

The Universal Cartridge 5600 Series is a modular cartridge seal family that includes interchangeable elastomer bellows, metal bellows, and elastomer O-ring pusher seal designs.

- The Type 5615 and 5615Q single seal arrangements incorporate a Sealol® edge welded metal bellows seal head.
- A common seal head/mating ring set, utilized throughout all versions, is reversible to allow rotating seat/mating ring or rotating seal head operation, and is interchangeable with O-ring seal heads.
- An optional quench gland (5615Q) is available for use on crystallizing services when outside injection is not available or product dilution is not permissible.

Design Features

- Reversible Seal Head
- ANSI B73.1M and DIN 24960 Pump-Compliant
- Modular Design
- Optimized Pressure Balanced Design

Performance Capabilities

- Temperature:
  -30˚C to 205˚C/-20˚F to 400˚F
- Pressure:
  Up to 21 bar g/300 psig max.
- Speed:
  Up to 25 m/s/5000 fpm
- End Play/Axial Float Allowance:
  0.13mm/0.005"
- Runout/Out of Squareness:
  0.05mm/0.002"

TYPE 5615/5615Q

UNIVERSAL CARTRIDGE™ Single Metal Bellows Seals

Type 5615 Typical Arrangement/Dimensional Data

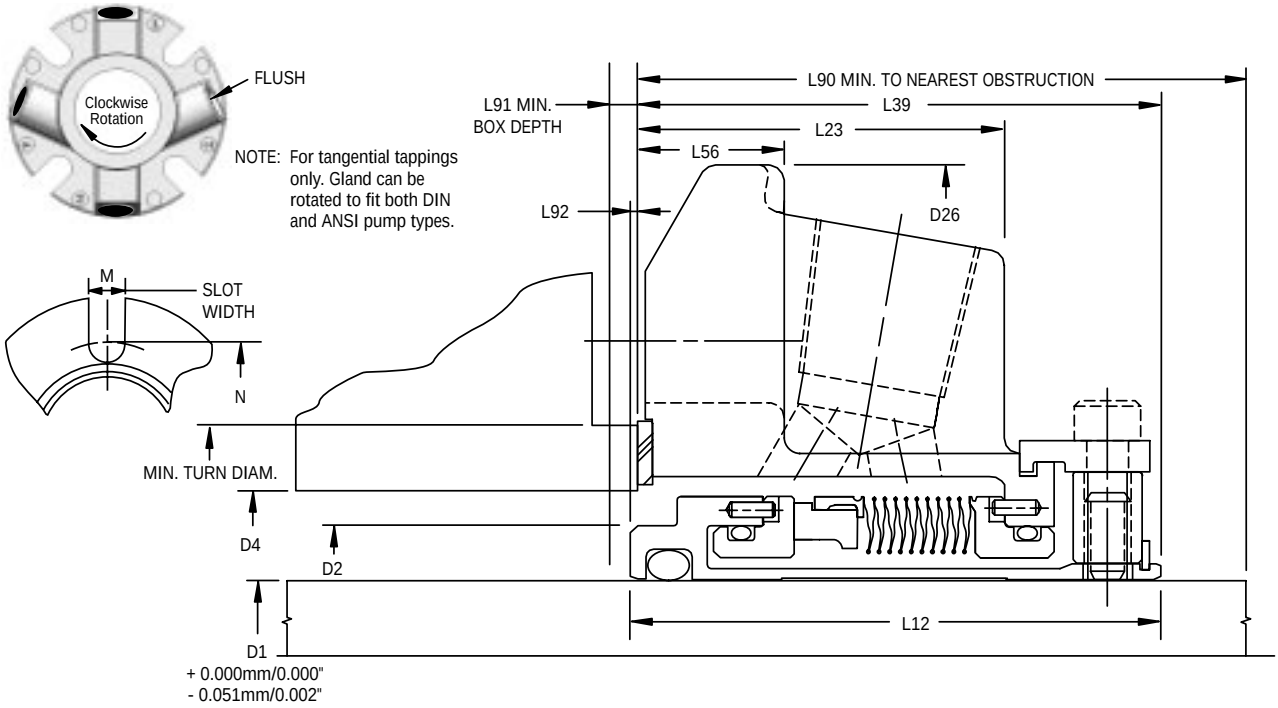

Type 5615 Dimensional Data (inches)

Seal Size/D1 (inches)	D2	D4 Min.	D4 Max.	D26	L12	L23	L39	L56	L90	L91	L92	M	N
1.000	1.375	1.445	1.889	4.000	1.989	1.353	1.954	0.531	2.000	0.160	0.035	0.525	2.805
1.125	1.500	*	2.015	4.125	2.062	1.446	2.062	0.531	2.125	0.125	*	0.525	2.933
1.250	1.625	*	2.294	4.250	2.062	1.446	2.062	0.531	2.125	0.125	*	0.525	3.213
1.375	1.750	*	2.421	4.375	2.062	1.446	2.062	0.531	2.125	0.125	*	0.525	3.338
1.500	1.937	2.007	2.680	4.875	2.156	1.487	2.125	0.593	2.187	0.156	0.031	0.525	3.599
1.625	2.062	2.132	2.812	5.000	2.156	1.487	2.125	0.593	2.187	0.156	0.031	0.562	3.766
1.750	2.170	2.240	2.918	5.250	2.156	1.487	2.125	0.593	2.187	0.156	0.031	0.562	3.875
1.875	2.312	2.382	2.918	5.250	2.156	1.487	2.125	0.593	2.187	0.156	0.031	0.562	3.875
2.000	2.437	2.507	3.015	5.500	2.375	1.601	2.312	1.063	2.375	0.187	0.062	0.562	4.000
2.125	2.562	2.632	3.360	5.859	2.375	1.601	2.312	0.593	2.375	0.187	0.062	0.687	4.469
2.250	2.687	2.757	3.485	6.500	2.375	1.601	2.312	0.593	2.375	0.187	0.062	0.687	4.566
2.375	2.812	2.882	3.610	6.500	2.484	1.717	2.466	0.625	2.528	0.143	0.018	0.687	4.719
2.500	3.062	*	3.891	6.750	2.484	1.717	2.563	0.625	2.625	0.125	*	0.687	5.000
2.625	3.312	*	4.062	6.750	2.500	1.625	2.500	0.625	2.562	0.125	*	0.687	5.170
2.750	3.312	*	4.062	6.750	2.500	1.625	2.500	0.625	2.562	0.125	*	0.687	5.170
2.875	3.375	*	4.186	7.000	2.500	1.725	2.500	0.625	2.562	0.125	*	0.687	5.312
3.000	3.625	*	4.469	7.750	2.500	1.787	2.562	0.685	2.625	0.125	*	0.812	5.720

*Not applicable. Completely outside mounted.

Type 5615 Oversize Bore Dimensional Data (inches)

Seal Size/D1 (inches)	D2	D4 Min.	D4 Max.	D26	L12	L23	L39	L56	L90	L91	L92	M	N	Min. Turn Diam.
1.375	1.750	2.875	3.023	5.375	2.062	1.446	2.062	0.625	2.125	0.250	0.125	0.562	4.062	3.268
1.750	2.170	3.500	3.925	6.500	2.156	1.487	2.125	0.656	2.187	0.250	0.125	0.687	5.093	3.885
1.875	2.312	3.625	3.734	6.500	2.156	1.316	1.954	0.485	2.017	0.327	0.202	0.687	5.093	**
2.125	2.562	3.875	4.250	7.156	2.375	1.570	2.282	0.749	2.407	0.219	0.094	0.687	5.687	4.264
2.500	3.062	4.750	4.875	8.000	2.484	1.697	2.407	0.656	2.532	0.204	0.079	0.687	6.062	5.139
2.625	3.312	4.625	4.740	8.000	2.500	1.617	2.329	0.578	2.454	0.296	0.171	0.687	6.062	***
2.750	3.312	4.750	4.875	8.000	2.500	1.697	2.407	0.656	2.532	0.218	0.093	0.687	6.062	5.139

**Seal cartridge is OD registered on the turn diam. of 4.125".

***Seal cartridge is OD registered on the turn diam. of 5.125".

TYPE 5615/5615Q

UNIVERSAL CARTRIDGE™ Single Metal Bellows Seals

Type 5615 Dimensional Data (mm)

Seal Size/D1 (mm)	Seal Size Code	D2	D4 Min.	D4 Max.	D26	L12	L23	L39	L56	L90	L91	L92	M	N
24	0240	34.9	36.7	48.0	101.6	50.5	34.4	49.6	13.5	50.8	4.0	0.9	13.3	71.2
25	0250	34.9	36.7	48.0	101.6	50.5	34.4	49.6	13.5	50.8	4.0	0.9	13.3	71.2
28	0280	38.1	*	51.2	104.8	52.4	36.7	52.4	13.5	54.0	3.2	*	13.3	74.5
30	0300	40.0	*	56.5	108.0	52.4	36.7	52.4	13.5	54.0	3.2	*	13.3	79.9
32	0320	41.3	*	58.3	108.0	52.4	36.7	52.4	13.5	54.0	3.2	*	13.3	81.6
33	0330	44.5	*	61.5	111.1	52.4	36.7	52.4	13.5	54.0	3.2	*	13.3	84.8
35	0350	44.5	*	61.5	111.1	52.4	36.7	52.4	13.5	54.0	3.2	*	13.3	84.8
38	0380	49.2	51.0	68.1	123.8	54.8	37.8	54.0	15.1	55.5	4.0	0.8	13.3	91.4
40	0400	52.4	54.2	71.4	127.0	54.8	37.8	54.0	15.1	55.5	4.0	0.8	14.3	95.7
43	0430	55.1	56.9	74.1	133.4	54.8	37.8	54.0	15.1	55.5	4.0	0.8	14.3	98.4
45	0450	55.1	56.9	74.1	133.4	54.8	37.8	54.0	15.1	55.5	4.0	0.8	14.3	98.4
48	0480	58.7	60.5	74.1	133.4	54.8	37.8	54.0	15.1	55.5	4.0	0.8	14.3	98.4
50	0500	61.9	63.7	76.6	139.7	60.3	40.7	58.7	27.0	60.3	4.7	1.6	14.3	101.6
53	0530	65.1	66.9	85.3	148.8	60.3	40.7	58.7	15.1	60.3	4.7	1.6	17.4	113.5
55	0550	66.7	75.0	85.3	148.8	60.3	40.7	58.7	15.1	60.3	4.7	1.6	17.4	113.5
58	0580	68.2	70.0	88.5	165.1	60.3	40.7	58.7	15.1	60.3	4.7	1.6	17.4	116.0
60	0600	71.4	73.2	91.7	165.1	63.1	43.6	62.6	15.9	64.2	3.6	0.5	17.4	119.9
63	0630	77.8	*	98.8	171.5	63.1	43.6	65.1	15.9	66.7	3.2	*	17.4	127.0
65	0650	77.8	*	98.8	171.5	63.1	43.6	65.1	15.9	66.7	3.2	*	17.4	127.0
68	0680	84.1	*	103.2	171.5	63.5	41.3	63.5	15.9	65.1	3.2	*	17.4	131.3
70	0700	84.1	*	103.2	171.5	63.5	41.3	63.5	15.9	65.1	3.2	*	17.4	131.3
75	0750	92.1	*	113.5	196.9	63.5	45.4	65.1	17.4	66.7	3.2	*	20.6	145.3

*Not applicable. Completely outside mounted.

Type 5615Q Typical Arrangement/Dimensional Data

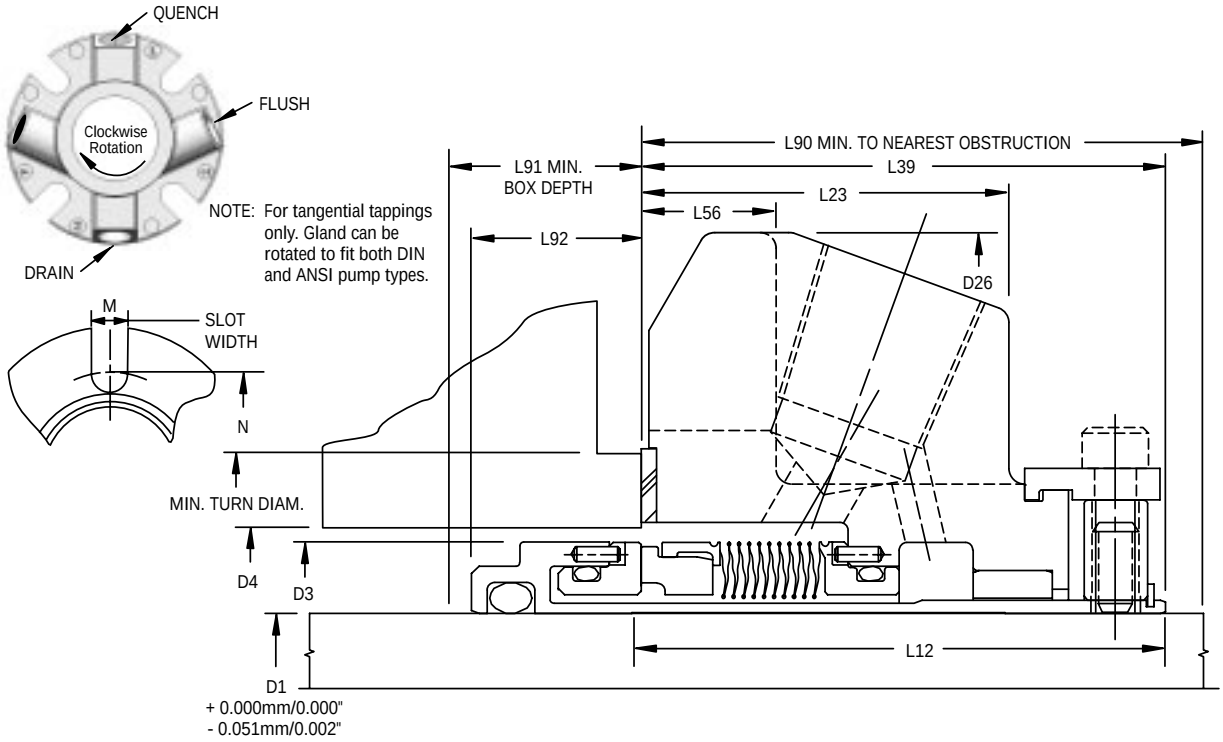

TYPE 5615/5615Q

UNIVERSAL CARTRIDGE™ Single Metal Bellows Seals

Type 5615Q Dimensional Data (inches)

Seal Size/D1 (inches)	D3	D4 Min.	D4 Max.	D26	L12	L23	L39	L56	L90	L91	L92	M	N
1.000	1.564	1.625	1.889	4.000	2.575	1.353	1.954	0.531	2.000	0.746	0.621	0.525	2.805
1.125	1.689	1.750	2.015	4.125	2.651	1.446	2.062	0.531	2.125	0.714	0.589	0.525	2.933
1.250	1.812	1.875	2.294	4.250	2.728	1.446	2.062	0.531	2.125	0.791	0.666	0.525	3.213
1.375	1.939	2.000	2.421	4.375	2.728	1.446	2.062	0.531	2.125	0.791	0.666	0.525	3.338
1.500	2.187	2.250	2.680	4.875	2.744	1.487	2.125	0.593	2.187	0.744	0.619	0.525	3.599
1.625	2.312	2.375	2.812	5.000	2.744	1.487	2.125	0.593	2.187	0.744	0.619	0.562	3.766
1.750	2.406	2.480	2.918	5.250	2.744	1.487	2.125	0.593	2.187	0.744	0.619	0.562	3.875
1.875	2.549	2.625	2.918	5.250	2.744	1.487	2.125	0.593	2.187	0.744	0.619	0.562	3.875
2.000	2.687	2.750	3.015	5.500	2.963	1.601	2.312	1.063	2.375	0.775	0.650	0.562	4.000
2.125	2.798	2.875	3.360	5.859	2.963	1.601	2.312	0.593	2.375	0.775	0.650	0.687	4.469
2.250	2.937	3.000	3.485	6.500	2.963	1.601	2.312	0.593	2.375	0.775	0.650	0.687	4.566
2.375	3.062	3.125	3.610	6.500	3.063	1.717	2.466	0.625	2.528	0.722	0.597	0.687	4.719
2.500	3.301	3.375	3.891	6.750	2.980	1.717	2.563	0.625	2.625	0.542	0.417	0.687	5.000
2.625	3.551	3.625	4.062	6.750	3.088	1.625	2.500	0.625	2.562	0.713	0.588	0.687	5.170
2.750	3.551	3.625	4.062	6.750	3.088	1.625	2.500	0.625	2.562	0.713	0.588	0.687	5.170
2.875	3.687	3.750	4.186	7.000	3.088	1.725	2.500	0.625	2.562	0.713	0.588	0.687	5.312
3.000	3.937	4.000	4.469	7.750	3.088	1.787	2.562	0.685	2.625	0.651	0.526	0.812	5.720

Type 5615Q Oversize Bore Dimensional Data (inches)

Seal Size/D1 (inches)	D3	D4 Min.	D4 Max.	D26	L12	L23	L39	L56	L90	L91	L92	M	N	Min. Turn Diam.
1.375	1.939	2.875	3.023	5.375	2.728	1.446	2.062	0.625	2.125	0.791	0.666	0.562	4.062	3.268
1.750	2.406	3.500	3.925	6.500	2.744	1.487	2.125	0.656	2.187	0.744	0.619	0.687	5.093	3.885
1.875	2.549	3.625	3.734	6.500	2.744	1.316	1.954	0.485	2.017	0.915	0.790	0.687	5.093	**
2.125	2.798	3.875	4.250	7.156	2.963	1.570	2.282	0.749	2.407	0.806	0.681	0.687	5.687	4.264
2.500	3.301	4.750	4.875	8.000	2.980	1.697	2.407	0.656	2.532	0.698	0.573	0.687	6.062	5.139
2.625	3.551	4.625	4.740	8.000	3.088	1.617	2.329	0.578	2.454	0.884	0.759	0.687	6.062	***
2.750	3.551	4.750	4.875	8.000	3.088	1.697	2.407	0.656	2.532	0.806	0.681	0.687	6.062	5.139

**Seal cartridge is OD registered on the turn diam. of 4.125".

***Seal cartridge is OD registered on the turn diam. of 5.125".

Type 5615Q Dimensional Data (mm)

Seal Size/D1 (mm)	Seal Size Code	D3	D4 Min.	D4 Max.	D26	L12	L23	L39	L56	L90	L91	L92	M	N
24	0240	39.7	41.3	48.0	101.6	65.4	34.4	49.6	13.5	50.8	18.9	15.8	13.3	71.2
25	0250	39.7	41.3	48.0	101.6	65.4	34.4	49.6	13.5	50.8	18.9	15.8	13.3	71.2
28	0280	42.9	44.5	51.2	104.8	67.3	36.7	52.4	13.5	54.0	18.1	15.0	13.3	74.5
30	0300	44.5	46.1	56.5	108.0	65.1	36.7	52.4	13.5	54.0	15.9	12.7	13.3	79.9
32	0320	46.0	47.6	58.3	108.0	69.3	36.7	52.4	13.5	54.0	20.1	16.9	13.3	81.6
33	0330	49.3	50.8	61.5	111.1	69.3	36.7	52.4	13.5	54.0	20.1	16.9	13.3	84.8
35	0350	49.3	50.8	61.5	111.1	69.3	36.7	52.4	13.5	54.0	20.1	16.9	13.3	84.8
38	0380	55.5	57.2	68.1	123.8	69.7	37.8	54.0	15.1	55.5	18.9	15.7	13.3	91.4
40	0400	58.7	60.3	71.4	127.0	69.7	37.8	54.0	15.1	55.5	18.9	15.7	14.3	95.7
43	0430	61.1	63.0	74.1	133.4	69.7	37.8	54.0	15.1	55.5	18.9	15.7	14.3	98.4
45	0450	61.1	63.0	74.1	133.4	69.7	37.8	54.0	15.1	55.5	18.9	15.7	14.3	98.4
48	0480	65.1	66.7	74.1	133.4	69.7	37.8	54.0	15.1	55.5	18.9	15.7	14.3	98.4
50	0500	68.3	70.0	76.6	139.7	75.3	40.7	58.7	27.0	60.3	19.7	16.5	14.3	101.6
53	0530	71.4	73.0	85.3	148.8	75.3	40.7	58.7	15.1	60.3	19.7	16.5	17.4	113.5
55	0550	72.9	75.0	85.3	148.8	75.3	40.7	58.7	15.1	60.3	19.7	16.5	17.4	113.5
58	0580	74.6	76.2	88.5	165.1	75.3	40.7	58.7	15.1	60.3	19.7	16.5	17.4	116.0
60	0600	77.8	79.4	91.7	165.1	77.8	43.6	62.6	15.9	64.2	18.3	15.2	17.4	119.9
63	0630	84.1	85.7	98.8	171.5	75.7	43.6	65.1	15.9	66.7	13.8	10.6	17.4	127.0
65	0650	84.1	85.7	98.8	171.5	75.7	43.6	65.1	15.9	66.7	13.8	10.6	17.4	127.0
68	0680	90.5	92.1	103.2	171.5	78.4	41.3	63.5	15.9	65.1	18.1	14.9	17.4	131.3
70	0700	90.5	92.1	103.2	171.5	78.4	41.3	63.5	15.9	65.1	18.1	14.9	17.4	131.3
75	0750	100.0	101.6	113.5	196.9	78.4	45.4	65.1	17.4	66.7	16.5	13.4	20.6	145.3

TYPE 5615/5615Q

UNIVERSAL CARTRIDGE™ Single Metal Bellows Seals

Pressure Rating Limits

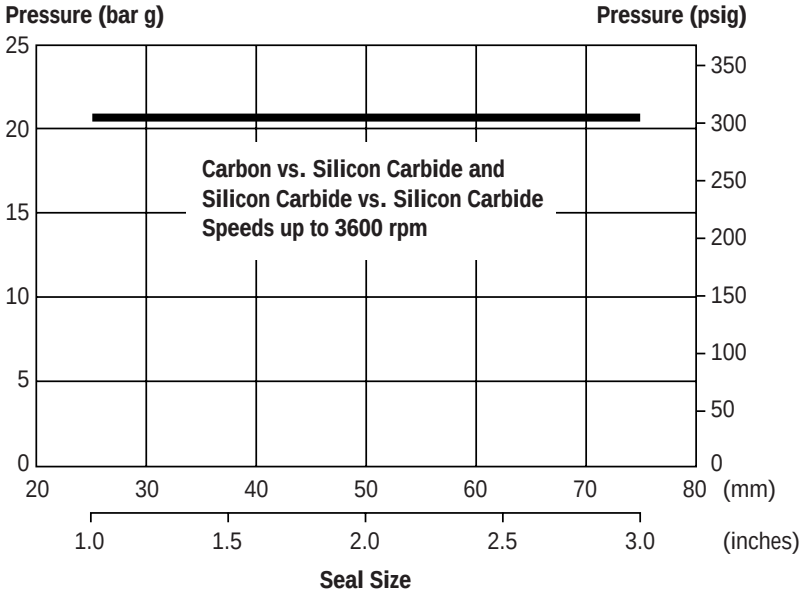

1. Where Carbon face is used, temperature limit is 200˚C/393˚F.
2. For Silicon Carbide vs. Tungsten Carbide temperature limits, consult John Crane Engineering.

Multiplier Factors

	Selection Considerations	Multiplier Factor
Sealed Fluid Lubricity	Petrol/Gasoline, Kerosene, or Better Water and Aqueous Solutions Light Hydrocarbons - (Specific Gravity ≤0.65), etc.	x 1.00 x 0.75 x 0.60
Sealed Fluid Temperature	Up to 80°C/175°F Above 80°C to 120°C/175°F to 250°F Above 120°C to 180°C/250°F to 355°F Above 180°C/350°F	x 1.00 x 0.90 x 0.80 x 0.65

Example for Determining Pressure Rating Limits:

Seal: 50.8mm/2" Diameter Type 5615
Product: Aqueous Solution
Face Materials: Silicon Carbide vs. Silicon Carbide
Operating Temperature: 90°C/194°F

Using the Pressure Rating Limits graph, the maximum pressure would be 21 bar g/300 psig.

From the Multiplier Factors chart, apply the multipliers for the specific service requirements to determine the maximum operating pressure for the application:

21 bar g/300 psig x 0.75 x 0.90 = 14 bar g/203 psig

The maximum operating pressure for this 50.8mm/2" Type 5615 is 14 bar g/203 psig.

TYPE 5615/5615Q

UNIVERSAL CARTRIDGE™ Single Metal Bellows Seals

Materials of Construction

SEAL COMPONENTS	MATERIALS	
Description	**Standard**	**Options**
Face/Primary Ring	Resin-Impregnated Carbon	Silicon Carbide Nickel Binder Tungsten Carbide
Seat/Mating Ring	Silicon Carbide	Nickel Binder Tungsten Carbide
Sleeve Gland Collar Gland Adapter Sleeve Adapter	316 Stainless Steel	Alloy 20CB3 SS Alloy C-276 (UNS N10276)
Bellows	Alloy 20CB3 SS	Alloy C-276 (UNS N10276)
O-Ring	Fluoroelastomer Ethylene Propylene	Perfluoroelastomer Buna-N
Gasket	Glass-Filled PTFE	—
Quench Bushing (5615Q)	Resin-Impregnated Carbon	—

Application Criteria

The Type 5615 and 5615Q Cartridge seals may be customized for specific installations after review and evaluation by John Crane Engineering. The following data is needed to evaluate the proposed service:

- Make and Model of Equipment
- Shaft or Sleeve OD
- Direction of Shaft Rotation Viewed from Drive End
- Seal Cavity Dimensions
- Speed
- Process Fluid
  - Specific Gravity
  - Box Pressure
  - Vapor Pressure
  - Temperature
  - Viscosity
- Quench Fluid (if applicable)

John Crane

North and Latin Americas
Morton Grove, Illinois USA
Tel: 1-847-967-2400
Fax: 1-847-967-3915
1-800-SEALING

Europe, Middle East, Africa
Slough, UK
Tel: 44-1753-224000
Fax: 44-1753-224224

Asia Pacific
Singapore
Tel: 65-222-9161
Fax: 65-223-5035

TI Group
Global Specialised Engineering

For your nearest John Crane facility, please contact one of the locations above.

If the products featured will be used in a potentially dangerous and/or hazardous process, your John Crane representative should be consulted prior to their selection and use. In the interest of continuous development, John Crane Companies reserve the right to alter designs and specifications without prior notice. It is dangerous to smoke while handling products made from PTFE. Old and new PTFE products must not be incinerated.