TYPE 5611/5611Q

UNIVERSAL CARTRIDGE™ Elastomer Bellows Seals

A – Face/Primary Ring
B – Seat/Mating Ring
C – Elastomer Bellows
D – Spring
E – Gland

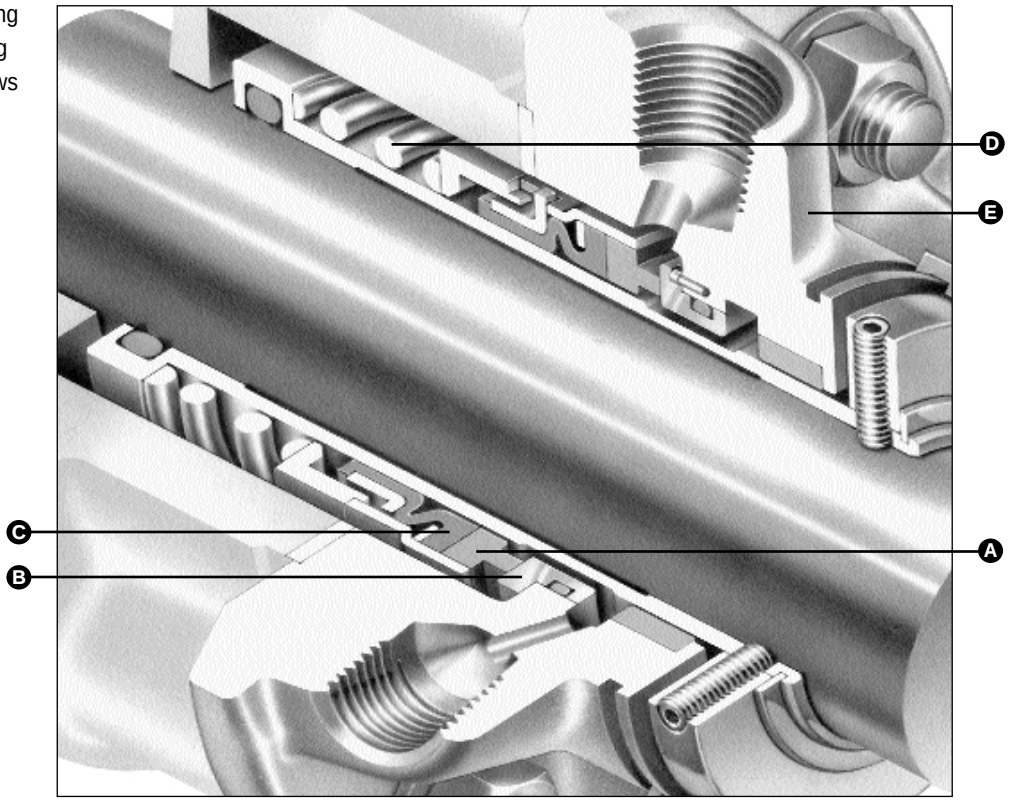

Product Description

The Universal Cartridge 5600 Series is a modular cartridge seal family that includes interchangeable elastomer bellows, Sealol® metal bellows, and elastomer o-ring pusher seal designs.

The Type 5611 and 5611Q single seal arrangements incorporate the John Crane Type 1 Seal head assembly with the Universal Cartridge adaptive hardware.

- Automatic adjustment compensates for abnormal shaft end play and runout, primary ring seal face wear, equipment tolerances, and service life.
- Seal has optional quench gland (5611Q) with carbon ring throttle bushing.

Design Features

- Nonclogging Single-Coil Spring
- Positive Mechanical Drive
- Full Convolution Elastomer Bellows
- Fits ANSI B73.1M, ISO 3069 and DIN 24960 Seal Chambers

Performance Capabilities

- Temperature:
  -30°C to 205°C/-20°F to 400°F
- Pressure:
  28 bar g/400 psig
- Speed:
  Up to 25 m/s / 5000 fpm
- End Play/Axial Float Allowance:
  0.13mm/0.005"
- Runout/Out of Squareness:
  0.05mm/0.002"

Sealol is a registered trademark of John Crane.

TYPE 5611/5611Q

UNIVERSAL CARTRIDGE™ Elastomer Bellows Seals

Basic Pressure Rating

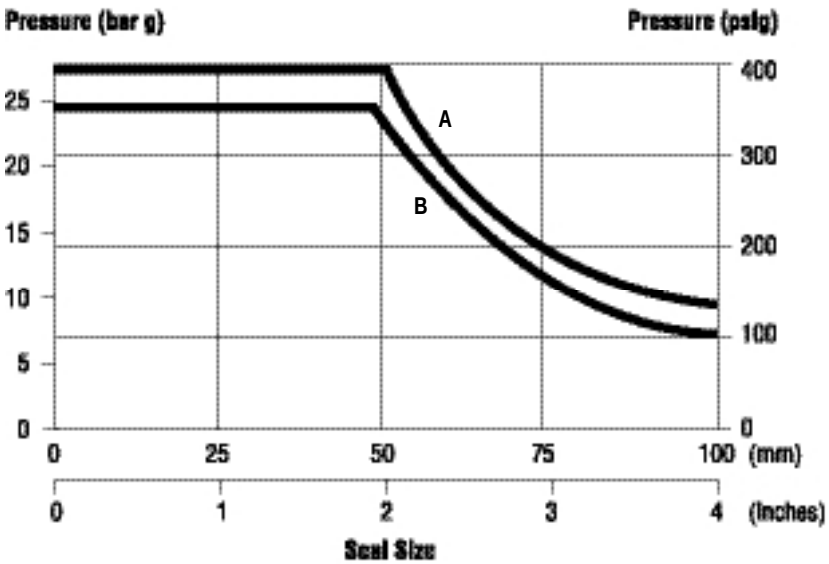

A Carbon vs. Silicon Carbide (1800 rpm)

B Silicon Carbide vs. Silicon Carbide (1800 rpm)

1. Lubricating liquid is defined as having lubricating properties of gasoline or better.
2. Pressure capabilities to 28 bar g/ 400 psig are based on lubricating oil service, Carbon vs. Silicon Carbide.
3. For sizes above 100mm/4", consult John Crane Engineering.

The Basic Pressure Rating is for a standard seal, as shown in the typical arrangement, when installed according to the criteria given in this data sheet and generally accepted industrial practices.

The Basic Pressure Rating assumes stable operation at 1800 rpm in a clean, cool, lubricating, nonvolatile liquid with an adequate flush rate. When used with the multiplier factors, the Basic Pressure Rating can be adjusted to provide a conservative estimate of the dynamic pressure rating. For process services outside this range or a more accurate assessment of the dynamic pressure rating, contact John Crane for more information.

Multiplier Factors

	Selection Considerations	Multiplier Factor
Speed	1800 rpm Other Speeds	x 1.00 *
Sealed Fluid Lubricity	Petrol/Gasoline, Kerosene, or Better Water and Aqueous Solutions (<80°C/176°F) Flashing Hydrocarbons**	x 1.00 x 0.75 x 0.60
Sealed Fluid Temperature (for carbon only)	Up to 80°C/175°F From 80°C to 120°C/175°F to 250°F From 120°C to 180°C/250°F to 350°F Above 180°C/350°F	x 1.00 x 0.90 x 0.80 x 0.65

* Multiplier = 1800/new speed Example: If new speed = 2700 rpm
Multiplier = 1800/2700 = 0.67

** The ratio of sealed pressure to vapor pressure must be greater than 1.5, otherwise consult John Crane. If the specific gravity is less than 0.60, consult John Crane.

Example for Determining Pressure Rating Limits:

Seal: 50.8mm/2" diameter Type 5611

Product: Water

Face Material: Carbon vs. Silicon Carbide

Temperature: 10°C/50°F

Shaft Speed: 1800 rpm

Using the Pressure Rating Limits graph, the maximum pressure would be 28 bar g/400 psig.

From the Multiplier Factors chart, apply the multipliers for the specific service requirements to determine the maximum operating pressure for the application.

28 bar g/400 psig x 1 x 0.75 x 1
= 21 bar g/300 psig

The maximum operating pressure of this 50.8mm/2" Type 5611 seal is 21 bar g/300 psig.

CUT LINE FOR SHORT PAGE

TYPE 5611/5611Q

UNIVERSAL CARTRIDGE™ Elastomer Bellows Seals

CUT LINE FOR SHORT PAGE

Type 5611 Typical Arrangement/Dimensional Data

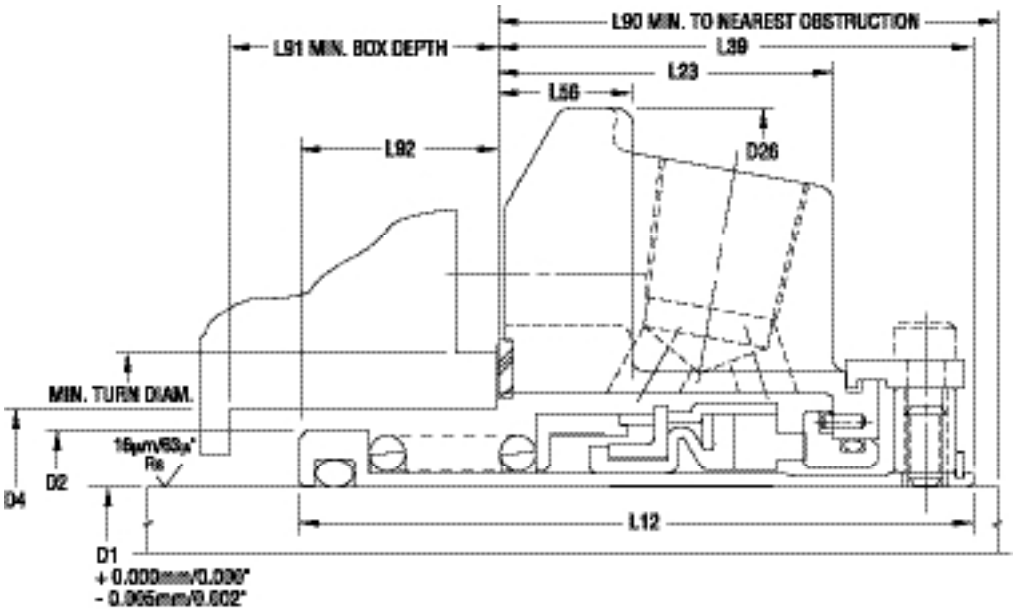

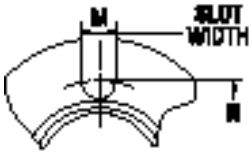

Type 5611 Dimensional Data (inches)

Seal Size/D1 (inches)	D2	D4 Min.	D4 Max.	D26	L12	L23	L39	L56	L90	L91	L92	M	N
1.000	1.375	1.500	1.889	4.000	2.739	1.353	1.954	0.531	2.000	0.910	0.785	0.525	2.805
1.125	1.500	1.625	2.015	4.125	2.595	1.446	2.062	0.531	2.125	0.658	0.533	0.525	2.933
1.250	1.687	1.812	2.294	4.250	2.718	1.446	2.062	0.531	2.125	0.781	0.656	0.525	3.213
1.375	1.812	1.937	2.421	4.375	2.625	1.446	2.062	0.531	2.125	0.688	0.563	0.525	3.338
1.500	2.000	2.125	2.680	4.875	2.960	1.487	2.125	0.593	2.187	0.960	0.835	0.525	3.599
1.625	2.125	2.250	2.812	5.000	3.022	1.487	2.125	0.593	2.187	1.022	0.897	0.562	3.766
1.750	2.250	2.375	2.918	5.250	3.038	1.487	2.125	0.593	2.187	1.038	0.913	0.562	3.875
1.875	2.375	2.500	2.918	5.250	3.038	1.487	2.125	0.593	2.187	1.038	0.913	0.562	3.875
2.000	2.687	2.750	3.015	5.500	3.454	1.601	2.312	1.063	2.375	1.266	1.141	0.562	4.000
2.125	2.812	2.875	3.360	5.859	3.454	1.601	2.312	0.593	2.375	1.266	1.141	0.687	4.469
2.250	2.750	2.875	3.485	6.500	3.579	1.601	2.312	0.593	2.375	1.391	1.266	0.687	4.566
2.375	3.062	3.125	3.610	6.500	3.468	1.717	2.466	0.625	2.528	1.127	1.002	0.687	4.719
2.500	3.250	3.375	3.891	6.750	3.829	1.717	2.563	0.625	2.625	1.391	1.266	0.687	5.000
2.625	3.500	3.625	4.062	6.750	3.978	1.625	2.500	0.625	2.562	1.603	1.478	0.687	5.170
2.750	3.500	3.625	4.062	6.750	3.978	1.625	2.500	0.625	2.562	1.603	1.478	0.687	5.170
2.875	3.625	3.695	4.186	7.000	3.978	1.725	2.500	0.625	2.562	1.603	1.478	0.687	5.312
3.000	3.937	4.000	4.469	7.750	4.172	1.787	2.562	0.685	2.625	1.735	1.610	0.812	5.720
3.125	4.062	4.125	4.600	7.875	4.187	1.593	2.562	*	2.687	1.750	1.625	0.812	5.845
3.250	4.062	4.125	4.600	7.437	4.187	1.593	2.510	*	2.635	1.802	1.677	0.812	5.845
3.375	4.312	4.375	4.850	8.125	4.375	1.593	2.562	*	2.687	1.938	1.813	0.812	6.095
3.500	4.437	4.500	4.975	8.250	4.344	1.593	2.562	*	2.687	1.907	1.782	0.812	6.220
3.625	4.562	4.625	5.100	8.375	4.625	1.593	2.562	*	2.687	2.188	2.063	0.687	6.250
3.750	4.632	4.724	5.199	8.750	4.437	1.593	2.562	*	2.687	2.000	1.875	0.687	6.770
3.875	4.812	4.905	5.375	8.750	4.500	1.593	2.562	*	2.687	2.063	1.938	0.812	6.636
4.000	4.937	5.031	5.500	9.000	4.812	1.593	2.562	*	2.687	2.375	2.250	0.812	6.761

*Not applicable. Refer to L23 for sizes over 3.000".

TYPE 5611/5611Q

UNIVERSAL CARTRIDGE™ Elastomer Bellows Seals

Type 5611 Oversize Bore Dimensional Data (inches)

Seal Size/D1 (inches)	D2	D4 Min.	D4 Max.	D26	L12	L23	L39	L56	L90	L91	L92	M	N	Min. Turn Diam.
1.375	1.812	2.875	3.023	5.375	2.625	1.446	2.062	0.625	2.125	0.688	0.563	0.562	4.062	3.268
1.750	2.250	3.500	3.925	6.500	3.038	1.487	2.125	0.656	2.187	1.038	0.913	0.687	5.093	3.885
1.875	2.375	3.625	3.734	6.500	3.038	1.316	1.954	0.485	2.017	1.209	1.084	0.687	5.093	**
2.125	2.687	3.875	4.250	7.156	3.454	1.570	2.282	0.749	2.407	1.297	1.172	0.687	5.687	4.264
2.500	3.250	4.750	4.875	8.000	3.829	1.697	2.407	0.656	2.532	1.547	1.422	0.687	6.062	5.139
2.625	3.437	4.625	4.740	8.000	3.978	1.617	2.329	0.578	2.454	1.774	1.649	0.687	6.062	***
2.750	3.437	4.750	4.875	8.000	3.978	1.697	2.407	0.656	2.532	1.696	1.571	0.687	6.062	5.139

**Seal cartridge is OD registered on the turn diam. of 4.125". ***Seal cartridge is OD registered on the turn diam. of 5.125".

Type 5611 Dimensional Data (mm)

Seal Size/D1 (mm)	Seal Size Code	D2	D4 Min.	D4 Max.	D26	L12	L23	L39	L56	L90	L91	L92	M	N
24	0240	34.9	38.1	48.0	101.6	69.6	34.4	49.6	13.5	50.8	23.1	20.0	13.3	71.2
25	0250	34.9	38.1	48.0	101.6	69.6	34.4	49.6	13.5	50.8	23.1	20.0	13.3	71.2
28	0280	38.1	41.3	51.2	104.8	65.9	36.7	52.4	13.5	54.0	16.7	13.5	13.3	74.5
30	0300	42.8	46.0	56.5	108.0	69.0	36.7	52.4	13.5	54.0	19.8	16.7	13.3	81.6
32	0320	42.8	46.0	58.3	108.0	69.0	36.7	52.4	13.5	54.0	19.8	16.7	13.3	81.6
33	0330	46.0	49.2	61.5	111.1	66.7	36.7	52.4	13.5	54.0	17.5	14.3	13.3	84.8
35	0350	46.0	49.2	61.5	111.1	66.7	36.7	52.4	13.5	54.0	17.5	14.3	13.3	84.8
38	0380	50.8	54.0	68.1	123.8	75.2	37.8	54.0	15.1	55.6	24.4	21.2	13.3	91.4
40	0400	54.0	57.2	71.4	127.0	76.8	37.8	54.0	15.1	55.6	26.0	22.8	14.3	95.7
43	0430	57.2	60.3	74.1	133.4	77.2	37.8	54.0	15.1	55.6	26.4	23.2	14.3	98.4
45	0450	57.2	60.3	74.1	133.4	77.2	37.8	54.0	15.1	55.6	26.4	23.2	14.3	98.4
48	0480	60.3	63.5	74.1	133.4	77.2	37.8	54.0	15.1	55.6	26.4	23.2	14.3	98.4
50	0500	68.2	69.9	76.6	139.7	87.7	40.7	58.7	27.0	60.3	32.2	29.0	14.3	101.6
53	0530	71.4	73.0	85.3	148.8	87.7	40.7	58.7	15.1	60.3	32.2	29.0	17.4	113.5
55	0550	69.9	73.0	85.3	148.8	90.9	40.7	58.7	15.1	60.3	35.4	32.2	17.4	113.5
58	0580	69.9	75.0	88.5	165.1	90.9	40.7	58.7	15.1	60.3	35.4	32.2	17.4	116.0
60	0600	77.8	79.4	91.7	165.1	88.1	43.6	62.6	15.9	64.2	28.6	25.5	17.4	119.9
63	0630	82.6	85.7	98.8	171.5	97.3	43.6	65.1	15.9	66.7	35.4	32.2	17.4	127.0
65	0650	82.6	85.7	98.8	171.5	97.3	43.6	65.1	15.9	66.7	35.4	32.2	17.4	127.0
68	0680	88.9	92.1	103.2	171.5	101.0	41.2	63.5	15.9	65.1	40.7	37.5	17.4	131.3
70	0700	88.9	92.1	103.2	171.5	101.0	41.2	63.5	17.4	65.1	40.7	37.5	17.4	131.3
75	0750	100.0	101.6	113.5	196.9	106.0	45.4	65.1	*	66.7	44.1	40.9	20.6	145.3
80	0800	103.2	104.8	116.8	188.9	106.4	40.5	63.8	*	66.9	45.8	42.6	20.6	148.5
85	0850	109.5	111.1	123.2	206.4	111.1	40.5	65.1	*	68.3	49.2	46.1	20.6	154.8
90	0900	115.9	117.5	129.5	212.7	117.5	40.5	65.1	*	68.3	55.6	52.4	17.4	158.8
95	0950	117.7	120.0	132.1	222.3	112.7	40.5	65.1	*	68.3	50.8	47.6	17.4	172.0
100	1000	125.4	127.8	139.7	228.6	122.2	40.5	65.1	*	68.3	60.3	57.2	20.6	171.7
125	1250	165.1	167.5	184.4	304.8	146.0	41.4	77.3	*	80.5	71.9	68.8	20.6	254.0

*Not applicable. Refer to L23 for sizes over 75mm.

TYPE 5611/5611Q

UNIVERSAL CARTRIDGE™ Elastomer Bellows Seals

Type 5611Q Typical Arrangement/Dimensional Data

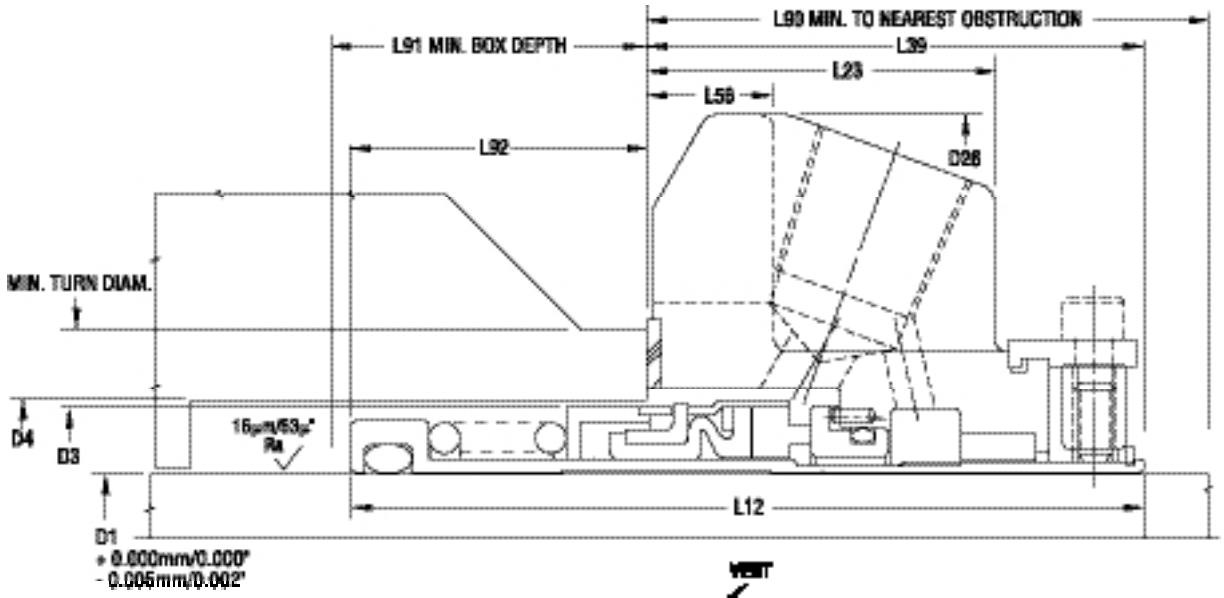

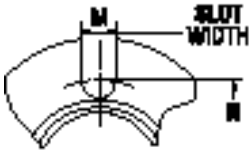

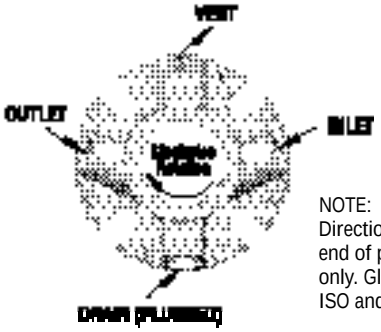

NOTE:
Direction of view is from the driver end of pump. For tangential tappings only. Gland can be rotated to fit both ISO and ANSI pump type.

Type 5611Q Dimensional Data (inches)

Seal Size/D1 (inches)	D3	D4 Min.	D4 Max.	D26	L12	L23	L39	L56	L90	L91	L92	M	N
1.000	1.562	1.625	1.889	4.000	3.327	1.353	1.954	0.531	2.000	1.498	1.373	0.525	2.805
1.125	1.687	1.750	2.015	4.125	3.183	1.446	2.062	0.531	2.125	1.246	1.121	0.525	2.933
1.250	1.812	1.875	2.294	4.250	3.390	1.446	2.062	0.531	2.125	1.453	1.328	0.525	3.213
1.375	1.937	2.000	2.421	4.375	3.290	1.446	2.062	0.531	2.125	1.353	1.228	0.525	3.338
1.500	2.156	2.218	2.680	4.875	3.548	1.487	2.125	0.593	2.187	1.548	1.423	0.525	3.599
1.625	2.281	2.343	2.812	5.000	3.610	1.487	2.125	0.593	2.187	1.610	1.485	0.562	3.766
1.750	2.406	2.480	2.918	5.250	3.626	1.487	2.125	0.593	2.187	1.626	1.501	0.562	3.875
1.875	2.531	2.625	2.918	5.250	3.626	1.487	2.125	0.593	2.187	1.626	1.501	0.562	3.875
2.000	2.687	2.750	3.015	5.500	4.042	1.601	2.312	1.063	2.375	1.854	1.729	0.562	4.000
2.125	2.812	2.875	3.360	5.859	4.042	1.601	2.312	0.593	2.375	1.854	1.729	0.687	4.469
2.250	2.937	3.000	3.485	6.500	4.167	1.601	2.312	0.593	2.375	1.979	1.854	0.687	4.566
2.375	3.062	3.125	3.610	6.500	4.062	1.717	2.466	0.625	2.528	1.783	1.596	0.687	4.719
2.500	3.250	3.375	3.891	6.750	4.325	1.717	2.563	0.625	2.625	1.887	1.762	0.687	5.000
2.625	3.500	3.625	4.062	6.750	4.566	1.625	2.500	0.625	2.562	2.191	2.066	0.687	5.170
2.750	3.500	3.625	4.062	6.750	4.566	1.625	2.500	0.625	2.562	2.191	2.066	0.687	5.170
2.875	3.625	3.695	4.186	7.000	4.578	1.725	2.500	0.625	2.562	2.203	2.078	0.687	5.312
3.000	3.937	4.000	4.469	7.750	4.750	1.787	2.562	0.685	2.625	2.313	2.188	0.812	5.720
3.125	4.062	4.125	4.600	7.875	4.781	1.593	2.562	*	2.687	2.344	2.219	0.812	5.845
3.250	4.062	4.125	4.600	7.437	4.718	1.593	2.510	*	2.635	2.333	2.208	0.812	5.845
3.375	4.312	4.375	4.850	8.125	4.969	1.593	2.562	*	2.687	2.532	2.407	0.812	6.095
3.500	4.437	4.500	4.975	8.250	4.969	1.593	2.562	*	2.687	2.532	2.407	0.812	6.220
3.625	4.562	4.625	5.100	8.375	5.218	1.593	2.562	*	2.687	2.781	2.656	0.687	6.250
3.750	4.687	4.781	5.199	8.750	5.031	1.593	2.562	*	2.687	2.594	2.469	0.687	6.770
3.875	4.875	4.968	5.375	8.750	5.093	1.593	2.562	*	2.687	2.656	2.531	0.812	6.636
4.000	5.021	5.114	5.500	9.000	5.406	1.593	2.562	*	2.687	2.969	2.844	0.812	6.761

*Not applicable. Refer to L23 for sizes over 75mm.

TYPE 5611/5611Q

UNIVERSAL CARTRIDGE™ Elastomer Bellows Seals

Type 5611Q Oversize Bore Dimensional Data (inches)

Seal Size/D1 (inches)	D3	D4 Min.	D4 Max.	D26	L12	L23	L39	L56	L90	L91	L92	M	N	Min. Turn Diam.
1.375	1.937	2.875	3.023	5.375	3.290	1.446	2.062	0.625	2.125	1.353	1.228	0.562	4.062	3.268
1.750	2.406	3.500	3.925	6.500	3.626	1.487	2.125	0.656	2.187	1.626	1.501	0.687	5.093	3.885
1.875	2.530	3.625	3.734	6.500	3.626	1.316	1.954	0.485	2.017	1.797	1.672	0.687	5.093	**
2.125	2.812	3.875	4.250	7.156	4.042	1.570	2.282	0.749	2.407	1.885	1.760	0.687	5.687	4.264
2.500	3.250	4.750	4.875	8.000	4.325	1.697	2.407	0.656	2.532	2.043	1.918	0.687	6.062	5.139
2.625	3.625	4.625	4.740	8.000	4.566	1.617	2.329	0.578	2.454	2.362	2.237	0.687	6.062	***
2.750	3.500	4.750	4.875	8.000	4.566	1.697	2.407	0.656	2.532	2.284	2.159	0.687	6.062	5.139

**Seal cartridge is OD registered on the turn diam. of 4.125". ***Seal cartridge is OD registered on the turn diam. of 5.125".

Type 5611Q Dimensional Data (mm)

Seal Size/D1 (mm)	Seal Size Code	D3	D4 Min.	D4 Max.	D26	L12	L23	L39	L56	L90	L91	L92	M	N
24	0240	39.7	41.3	48.0	101.6	84.5	34.4	49.6	13.5	50.8	38.0	34.9	13.3	71.2
25	0250	39.7	41.3	48.0	101.6	84.5	34.4	49.6	13.5	50.8	38.0	34.9	13.3	71.2
28	0280	42.9	44.5	51.2	104.8	80.8	36.7	52.4	13.5	54.0	31.6	28.5	13.3	74.5
30	0300	44.5	46.1	56.5	108.0	81.7	36.7	52.4	13.5	54.0	32.5	29.4	13.3	81.6
32	0320	45.0	47.6	58.3	108.0	86.1	36.7	52.4	13.5	54.0	36.9	33.7	13.3	81.6
33	0330	49.2	50.8	61.5	111.1	83.6	36.7	52.4	13.5	54.0	34.4	31.2	13.3	84.8
35	0350	49.2	50.8	61.5	111.1	83.6	36.7	52.4	13.5	54.0	34.4	31.2	13.3	84.8
38	0380	54.8	56.3	68.1	123.8	90.1	37.8	54.0	15.1	55.6	39.3	36.1	13.3	91.4
40	0400	57.9	59.5	71.4	127.0	91.7	37.8	54.0	15.1	55.6	40.9	37.7	14.3	95.7
43	0430	61.1	63.0	74.1	133.4	92.1	37.8	54.0	15.1	55.6	41.3	38.1	14.3	98.4
45	0450	61.1	63.0	74.1	133.4	92.1	37.8	54.0	15.1	55.6	41.3	38.1	14.3	98.4
48	0480	64.3	66.7	74.1	133.4	92.1	37.8	54.0	15.1	55.6	41.3	38.1	14.3	98.4
50	0500	68.2	70.0	76.6	139.7	102.7	40.7	58.7	27.0	60.3	47.1	43.9	14.3	101.6
53	0530	71.4	73.0	85.3	148.8	102.7	40.7	58.7	15.1	60.3	47.1	43.9	17.4	113.5
55	0550	74.6	76.7	85.3	148.8	105.8	40.7	58.7	15.1	60.3	50.3	47.1	17.4	113.5
58	0580	74.6	76.2	88.5	165.1	105.8	40.7	58.7	15.1	60.3	50.3	47.1	17.4	116.0
60	0600	77.8	79.4	91.7	165.1	103.2	43.6	62.6	15.9	64.2	43.7	40.5	17.4	119.9
63	0630	82.6	85.7	98.8	171.5	109.9	43.6	65.1	15.9	66.7	48.0	44.8	17.4	127.0
65	0650	82.6	85.7	98.8	171.5	109.9	43.6	65.1	15.9	66.7	48.0	44.8	17.4	127.0
68	0680	88.9	92.1	103.2	171.5	116.0	41.2	63.5	15.9	65.1	55.7	52.5	17.4	131.3
70	0700	88.9	92.1	103.2	171.5	116.0	41.2	63.5	15.9	65.1	55.7	52.5	17.4	131.3
75	0750	100.0	101.6	113.5	196.9	120.7	45.4	65.1	17.4	66.7	58.8	55.6	20.6	145.3
80	0800	103.2	104.8	116.8	188.9	119.8	40.5	63.8	*	66.9	59.3	56.1	20.6	148.4
85	0850	109.5	111.1	123.2	206.4	126.2	40.5	65.1	*	68.3	64.3	61.1	20.6	154.8
90	0900	115.9	117.5	129.5	212.7	132.5	40.5	65.1	*	68.3	70.6	67.5	17.4	158.8
95	0950	119.1	121.4	132.1	222.3	127.8	40.5	65.1	*	68.3	65.9	62.7	17.4	172.0
100	1000	127.5	129.9	139.7	228.6	137.3	40.5	65.1	*	68.3	75.4	72.2	20.6	171.7
125	1250	165.1	167.5	184.4	304.8	162.7	44.4	77.2	*	80.5	88.5	88.4	20.6	254.0

*Not applicable. Refer to L23 for sizes over 75mm.

CUT LINE FOR SHORT PAGE

TYPE 5611/5611Q

UNIVERSAL CARTRIDGE™ Elastomer Bellows Seals

Materials of Construction

SEAL COMPONENTS	MATERIALS	
Description	**Standard**	**Options**
Face/Primary Ring	Resin-Impregnated Carbon	Sintered Silicon Carbide Nickel Binder Tungsten Carbide
Seat/Mating Ring	Sintered Silicon Carbide	Nickel Binder Tungsten Carbide
Sleeve Gland Plate Collar Retainer Disc Drive Band Spring Holder	316 Stainless Steel	
Bellows/O-Rings	Fluoroelastomer Ethylene Propylene	Nitrile Neoprene Aflas™
Gasket	Glass-Filled PTFE	—
Spring	316 Stainless Steel	—
Quench Bushing (5611Q)	Resin-Impregnated Carbon	—

Aflas is a trademark of Asahi Glass Co. Ltd.

CUT LINE FOR SHORT PAGE

TYPE 5611/5611Q

UNIVERSAL CARTRIDGE™ Elastomer Bellows Seals

John Crane

North America
Morton Grove, Illinois USA

Tel: 1-847-967-2400
Fax: 1-847-967-3915
1-800-SEALING

Europe, Middle East, Africa
Slough, UK

Tel: 44-1753-224000
Fax: 44-1753-224224

Latin America
São Paulo, Brazil

Tel: 55-11-3049-9900
Fax: 55-11-3849-8270

Asia Pacific
Singapore

Tel: 65-222-9161
Fax: 65-223-5085

For your nearest John Crane facility, please contact one of the locations above.

If the products featured will be used in a potentially dangerous and/or hazardous process, your John Crane representative should be consulted prior to their selection and use. In the interest of continuous development, John Crane Companies reserve the right to alter designs and specifications without prior notice. It is dangerous to smoke while handling products made from PTFE. Old and new PTFE products must not be incinerated.

©2001 John Crane Print 1/01