TYPE 5620/5620PR

UNIVERSALCARTRIDGE™ Dual O-Ring Seals

5620/5620PR

A – Face/Primary Ring
B – Seat/Mating Ring
C – Secondary O-Ring
D – Nonclogging Wave Spring
E – Sleeve
F – Gland

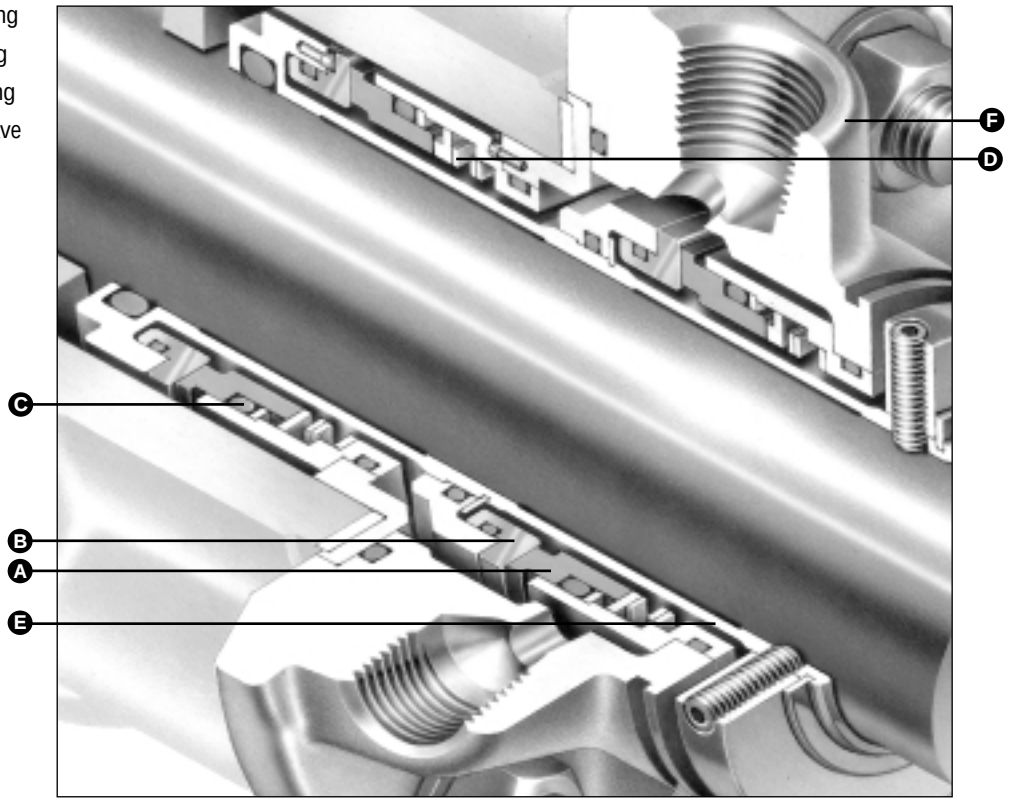

Product Description

The Universal Cartridge 5600 Series is a modular cartridge seal family that includes interchangeable elastomer bellows, Sealol® metal bellows, and elastomer o-ring pusher seal designs.

- Dual seal arrangements incorporate an elastomer o-ring as the dynamic secondary sealing member.
- Primary and mating ring reverse balance designs allow for ID or OD pressurization, which permits the dual seal to operate as a tandem or double.
- OD pressurization of the outboard seal avoids subjecting components to high tensile stresses and achieves improved cooling. On vertical installations, it allows venting of entrapped air.

Design Features

- Reversible Seal Head.
- Nonclogging Wave Spring Outside the Product.
- Fits ANSI B73.1M and ISO 3069 Seal Chambers.
- Optimized Primary Ring Design for Greater Reliability.
- Setscrewless Outboard Seal Drive.
- Tangential Inlet and Outlet Pipe Connections below 75mm/3.000".

Performance Capabilities

- Temperature:
  -30°C to 205°C/-20°F to 400°F
- Pressure:
  Up to 75mm/3.000": 21 bar g/300 psig
  75mm/3.000" and Over: 13 bar g/200 psig max.
- Speed:
  Up to 25 m/s /5000 fpm
- End Play/Axial Float Allowance:
  0.13mm/0.005"
- Runout/Out of Squareness:
  0.05mm/0.002"

Sealol is a registered trademark of John Crane.

TYPE 5620/5620PR

UNIVERSAL CARTRIDGE™ Dual O-Ring Seals

Type 5620 Typical Arrangement/Dimensional Data

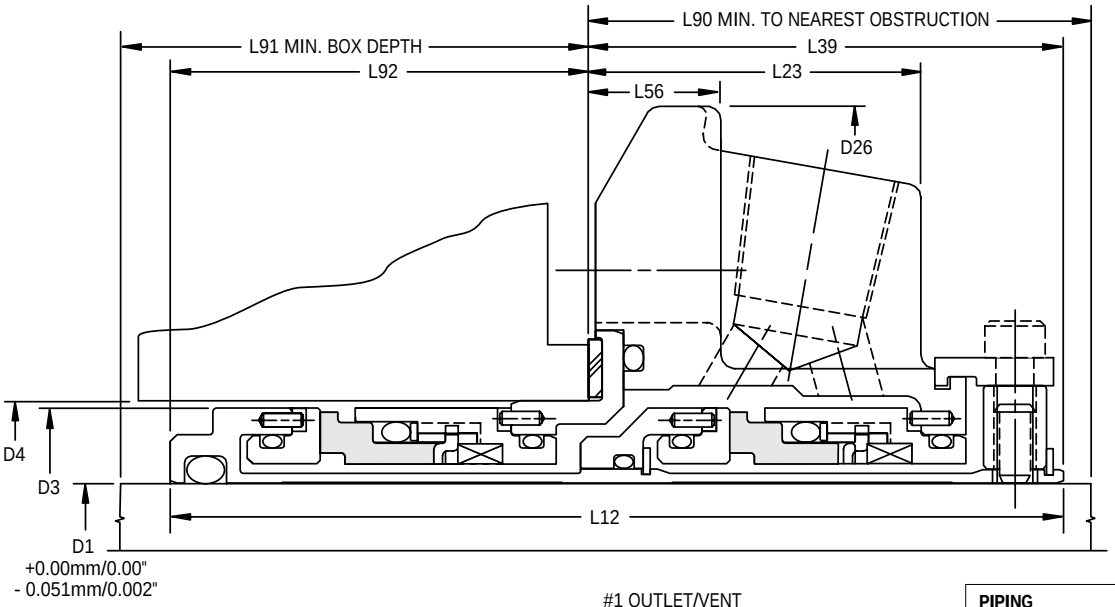

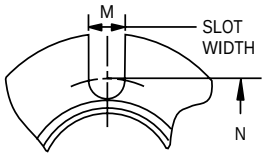

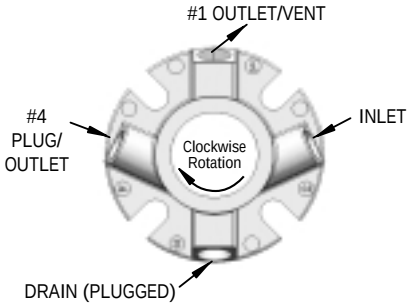

PIPING	
Self Venting	#1 Outlet #2 Plugged
Optional Tangential Outlet	#1 Vent #4 Outlet

NOTE:
Direction of view is from the driver end of pump. Gland can be rotated to fit both ISO and ANSI pump type.

Type 5620PR Typical Arrangement/Dimensional Data

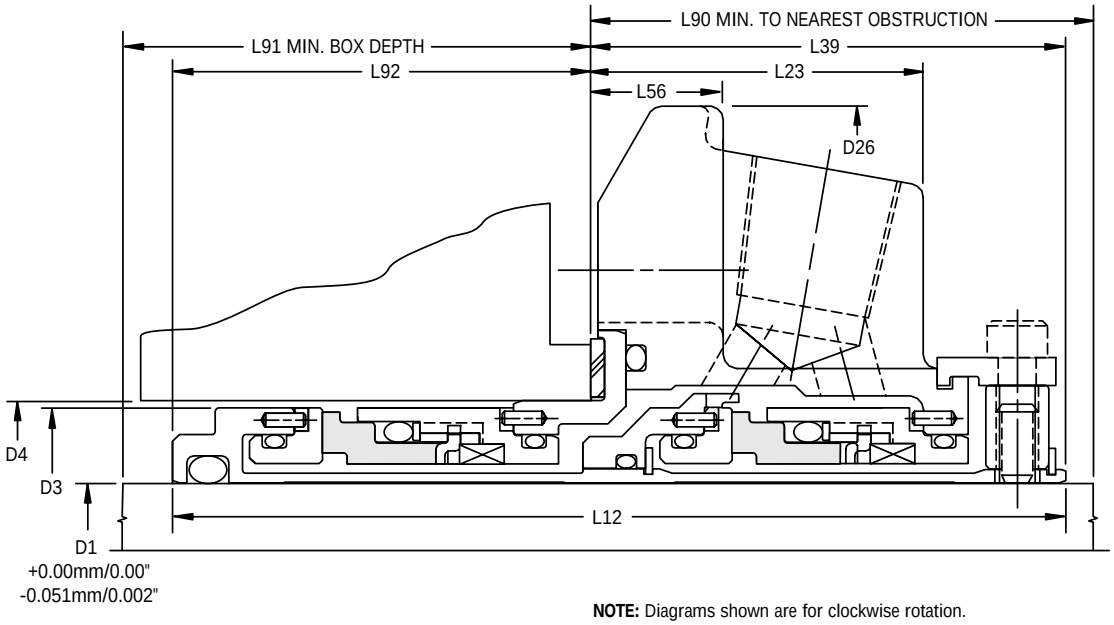

NOTE: Diagrams shown are for clockwise rotation.
For counter-clockwise shaft rotation, consult John Crane Engineering.

TYPE 5620/5620PR

UNIVERSAL CARTRIDGE™ Dual O-Ring Seals

Type 5620/5620PR Dimensional Data (inches)

Seal Size/D1 (inches)	D3	D4 Min.	D4 Max.	D26	L12	L23	L39	L56	L90	L91	L92	M	N
1.000	1.564	1.625	1.889	4.000	3.705	1.353	1.954	0.531	2.000	1.876	1.751	0.525	2.805
1.125	1.689	1.750	2.015	4.125	3.851	1.446	2.062	0.531	2.125	1.914	1.789	0.525	2.933
1.250	1.812	1.875	2.294	4.250	3.851	1.446	2.062	0.531	2.125	1.914	1.789	0.525	3.213
1.375	1.939	2.000	2.421	4.375	3.851	1.446	2.062	0.531	2.125	1.914	1.789	0.525	3.338
1.500	2.187	2.250	2.680	4.875	3.995	1.487	2.125	0.593	2.187	1.995	1.870	0.525	3.599
1.625	2.312	2.375	2.812	5.000	3.995	1.487	2.125	0.593	2.187	1.995	1.870	0.562	3.766
1.750	2.406	2.480	2.918	5.250	3.995	1.487	2.125	0.593	2.187	1.995	1.870	0.562	3.875
1.875	2.549	2.625	2.918	5.250	3.995	1.487	2.125	0.593	2.187	1.995	1.870	0.562	3.875
2.000	2.673	2.750	3.015	5.500	4.355	1.601	2.312	1.063	2.375	2.167	2.042	0.562	4.000
2.125	2.798	2.875	3.360	5.859	4.355	1.601	2.312	0.593	2.375	2.167	2.042	0.687	4.469
2.250	2.923	3.000	3.485	6.500	4.355	1.601	2.312	0.593	2.375	2.167	2.042	0.687	4.566
2.375	3.048	3.125	3.610	6.500	4.545	1.717	2.466	0.625	2.528	2.204	2.079	0.687	4.719
2.500	3.301	3.375	3.891	6.750	4.545	1.717	2.563	0.625	2.625	2.107	1.982	0.687	5.000
2.625	3.551	3.625	4.062	6.750	4.594	1.625	2.500	0.625	2.562	2.219	2.094	0.687	5.170
2.750	3.551	3.625	4.062	6.750	4.594	1.625	2.500	0.625	2.562	2.219	2.094	0.687	5.170
2.875	3.614	3.750	4.186	7.000	4.594	1.725	2.500	0.625	2.562	2.219	2.094	0.687	5.312
3.000	3.864	4.000	4.469	7.750	4.594	1.787	2.562	0.685	2.625	2.157	2.032	0.812	5.720
3.125	4.022	4.125	4.600	7.875	4.687	1.593	2.562	*	2.687	2.250	2.125	0.812	5.845
3.250	4.022	4.134	4.600	7.437	4.687	1.593	2.510	*	2.635	2.302	2.177	0.812	5.845
3.375	4.246	4.375	4.850	8.125	4.687	1.593	2.562	*	2.687	2.250	2.125	0.812	6.095
3.500	4.371	4.500	4.975	8.250	4.687	1.593	2.562	*	2.687	2.250	2.125	0.812	6.220
3.625	4.500	4.625	5.100	8.375	4.687	1.593	2.562	*	2.687	2.250	2.125	0.687	6.250
3.750	4.625	4.724	5.199	8.750	4.687	1.593	2.562	*	2.687	2.250	2.125	0.687	6.770
3.875	4.750	4.875	5.375	8.750	4.687	1.593	2.562	*	2.687	2.250	2.125	0.812	6.636
4.000	4.875	5.000	5.500	9.000	4.687	1.593	2.562	*	2.687	2.250	2.125	0.812	6.761
4.125	5.000	5.125	5.625	9.000	4.687	1.593	2.562	*	2.687	2.250	2.125	0.812	6.886
4.250	5.125	5.250	5.750	9.250	4.687	1.593	2.562	*	2.687	2.250	2.125	0.812	7.011
4.500	5.375	5.500	6.000	9.500	4.687	1.593	2.562	*	2.687	2.250	2.125	0.812	7.261
4.750	5.625	5.750	6.313	10.375	4.687	1.593	2.562	*	2.687	2.250	2.125	0.812	7.574
5.000	6.125	6.760	7.260	12.000	5.515	1.749	3.043	*	3.168	2.598	2.473	0.812	10.000
5.250	6.375	7.010	7.510	12.250	5.515	1.749	3.043	*	3.168	2.598	2.473	0.812	10.250
5.500	6.625	7.500	8.000	12.687	5.515	1.749	3.043	*	3.168	2.598	2.473	0.937	10.500

*Not applicable. Refer to L23 for sizes over 3.00".

Type 5620/5620PR Oversize Bore Dimensional Data (inches)

Seal Size/D1 (inches)	D3	D4 Min.	D4 Max.	D26	L12	L23	L39	L56	L90	L91	L92	M	N
1.375	1.939	2.875	3.023	5.375	3.851	1.446	2.062	0.625	2.125	1.914	1.789	0.562	4.062
1.750	2.406	3.500	3.925	6.500	3.995	1.487	2.125	0.656	2.187	1.995	1.870	0.687	5.093
1.875	2.549	3.625	3.734	6.500	3.995	1.487	2.125	0.656	2.187	1.995	1.870	0.687	5.093
2.125	2.798	3.875	4.250	7.156	4.355	1.570	2.282	0.749	2.407	2.198	2.073	0.687	5.687
2.500	3.301	4.750	4.875	8.000	4.545	1.697	2.407	0.656	2.532	2.263	2.138	0.687	6.062
2.625	3.551	4.625	4.740	8.000	4.594	1.788	2.500	0.749	2.562	2.219	2.094	0.687	6.062
2.750	3.551	4.750	4.875	8.000	4.594	1.697	2.407	0.656	2.532	2.312	2.187	0.687	6.062

TYPE 5620/5620PR

UNIVERSAL CARTRIDGE™ Dual O-Ring Seals

Type 5620/5620PR Dimensional Data (mm)

Seal Size/D1 (mm)	Seal Size Code	D3	D4 Min.	D4 Max.	D26	L12	L23	L39	L56	L90	L91	L92	M	N
24	0240	39.7	41.3	48.0	101.6	94.1	34.4	49.6	13.5	50.8	47.7	44.5	13.3	71.2
25	0250	39.7	41.3	48.0	101.6	94.1	34.4	49.6	13.5	50.8	47.7	44.5	13.3	71.2
28	0280	42.9	44.5	51.2	104.8	97.8	36.7	52.4	13.5	54.0	48.6	45.4	13.3	74.5
30	0300	44.5	46.1	56.5	108.0	97.8	36.7	52.4	13.5	54.0	48.6	45.4	13.3	79.9
32	0320	46.0	47.6	58.3	108.0	97.8	36.7	52.4	13.5	54.0	48.6	45.4	13.3	81.6
33	0330	49.3	50.8	61.5	111.1	97.8	36.7	52.4	13.5	54.0	48.6	45.4	13.3	84.8
35	0350	49.3	50.8	61.5	111.1	97.8	36.7	52.4	13.5	54.0	48.6	45.4	13.3	84.8
38	0380	55.5	57.2	68.1	123.8	101.5	37.8	54.0	15.1	55.5	50.7	47.5	13.3	91.4
40	0400	58.7	60.3	71.4	127.0	101.5	37.8	54.0	15.1	55.5	50.7	47.5	14.3	95.7
43	0430	61.1	63.0	74.1	133.4	101.5	37.8	54.0	15.1	55.5	50.7	47.5	14.3	98.4
45	0450	61.1	63.0	74.1	133.4	101.5	37.8	54.0	15.1	55.5	50.7	47.5	14.3	98.4
48	0480	64.7	66.7	74.1	133.4	101.5	37.8	54.0	15.1	55.5	50.7	47.5	14.3	98.4
50	0500	67.9	70.0	76.6	139.7	110.6	40.7	58.7	27.0	60.3	55.0	51.9	14.3	101.6
53	0530	71.1	73.0	85.3	148.8	110.6	40.7	58.7	15.1	60.3	55.0	51.9	17.4	113.5
55	0550	72.9	75.0	85.3	148.8	110.6	40.7	58.7	15.1	60.3	55.0	51.9	17.4	113.5
58	0580	74.2	76.2	88.5	165.1	110.6	40.7	58.7	15.1	60.3	55.0	51.9	17.4	116.0
60	0600	77.4	79.4	91.7	165.1	115.4	43.6	62.6	15.9	64.2	56.0	52.8	17.4	119.9
63	0630	83.8	85.7	98.8	171.5	115.4	43.6	65.1	15.9	66.7	53.5	50.3	17.4	127.0
65	0650	83.8	85.7	98.8	171.5	115.4	43.6	65.1	15.9	66.7	53.5	50.3	17.4	127.0
68	0680	90.2	92.1	103.2	171.5	116.7	41.3	63.5	15.9	65.1	56.4	53.2	17.4	131.3
70	0700	90.2	92.1	103.2	171.5	116.7	41.3	63.5	15.9	65.1	56.4	53.2	17.4	131.3
75	0750	98.1	101.6	113.5	196.9	116.7	45.4	65.1	17.4	66.7	54.8	51.6	20.6	145.3
80	0800	102.2	105.0	116.8	188.9	119.0	40.5	63.8	*	66.9	58.5	55.3	20.6	148.5
85	0850	107.9	111.1	123.2	206.4	119.0	40.5	65.1	*	68.3	57.2	54.0	20.6	154.8
90	0900	114.3	117.5	129.5	212.7	119.0	40.5	65.1	*	68.3	57.2	54.0	17.5	158.6
95	0950	117.5	120.0	132.1	222.3	119.0	40.5	65.1	*	68.3	57.2	54.0	17.5	172.0
100	1000	123.8	127.0	139.7	228.6	119.0	40.5	65.1	*	68.3	57.2	54.0	20.6	171.7
105	1050	127.0	130.2	142.9	228.6	119.0	40.5	65.1	*	68.3	57.2	54.0	20.6	174.9
110	1100	136.5	139.7	152.4	241.3	119.0	40.5	65.1	*	68.3	57.2	54.0	20.6	184.4
115	1150	136.5	139.7	152.4	241.3	119.0	40.5	65.1	*	68.3	57.2	54.0	20.6	184.4
120	1200	142.9	146.1	160.4	263.5	119.0	40.5	65.1	*	68.3	57.2	54.0	20.6	192.4
125	1250	155.6	171.7	184.4	304.8	140.1	44.4	77.3	*	80.5	66.0	62.8	20.6	254.0
130	1300	161.9	178.1	190.8	311.2	140.1	44.4	77.3	*	80.5	66.0	62.8	20.6	260.4
135	1350	168.3	190.5	203.2	322.3	140.1	44.4	77.3	*	80.5	66.0	62.8	20.8	266.7
140	1400	168.3	190.5	203.2	322.3	140.1	44.4	77.3	*	80.5	66.0	62.8	20.8	266.7

*Not applicable. Refer to L23 for sizes over 75mm.

TYPE 5620/5620PR

UNIVERSAL CARTRIDGE™ Dual O-Ring Seals

Maximum Pressure Limits

Tandem Type 5620*
Process Pressure
Up to 75mm/3.000": 21 bar g/300 psig Over 75mm/3.000": 13 bar g/200 psig

Double Type 5620*	
Barrier Fluid Pressure**	**Inboard Seal Internal Pressure Rating*****
21 bar g/ 300 psig	2-4 bar g/20-50 psig (Norm.) 21 bar g/300 psig (Max.)

* Barrier fluid pressure relative to seal chamber pressure (API Plan 52 or 53) determines usage of the cartridge. As a tandem, the buffer pressure is lower than process pressure; or as a double, the barrier pressure is higher than process fluid pressure to be sealed.

** John Crane Engineering recommends barrier fluids having a viscosity less than 14cSt/65 SSU and fluid lubricity that is equal to or better than water at 38˚C/100˚F.

*** Inboard seal (Process side) internal pressure rating is defined as the Barrier Fluid Pressure minus the Seal Chamber Throat Pressure.

Basic Pressure Rating

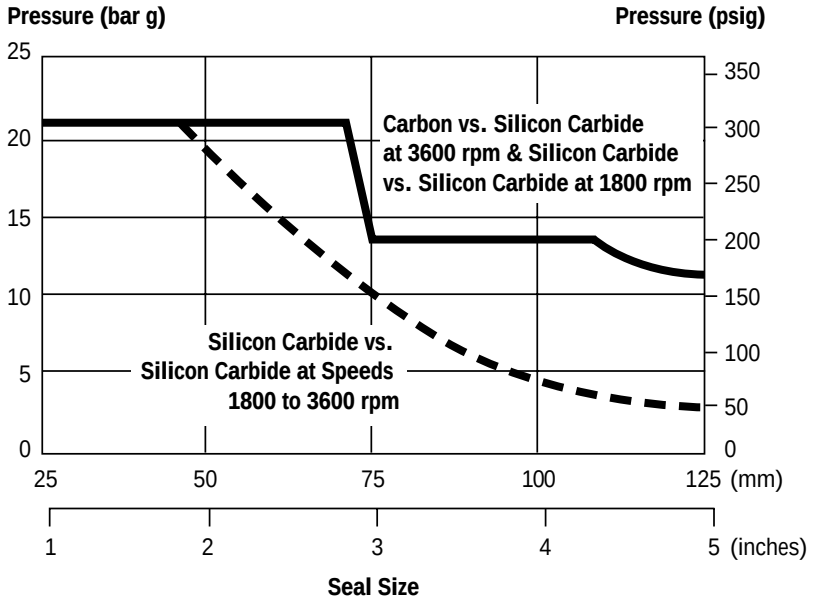

The Basic Pressure Rating is for a standard seal, as shown in the typical arrangement, when installed according to the criteria given in this data sheet and generally accepted industrial practices.

The Basic Pressure Rating assumes stable operation at the speed indicated in a clean, cool, lubricating, nonvolatile liquid with an adequate flush rate. When used with the multiplier factors, the Basic Pressure Rating can be adjusted to provide a conservative estimate of the dynamic pressure rating. For process services outside this range or a more accurate assessment of the dynamic pressure rating, contact John Crane for more information.

Multiplier Factors

	Selection Considerations	Multiplier Factor
Sealed Fluid Lubricity (applies to Silicon Carbide vs. Silicon Carbide only)	Petrol/Gasoline, Kerosene, or Better Water and Aqueous Solutions Flashing Hydrocarbons* (Specific Gravity ≤0.65 etc.)	x 1.00 x 0.75 x 0.60
Sealed Fluid Temperature For Carbon Only, sizes 100 mm/4 in. and above)	Up to 80°C/175°F From 80°C to 120°C/175°F to 250°F From 120°C to 180°C/250°F to 355°F From 180°C to 230°C/355°F to 445°F	x 1.00 x 0.90 x 0.80 x 0.65

*The ratio of sealed pressure to vapor pressure must be greater than 1.5, otherwise consult John Crane. If the specific gravity is less than 0.60, consult John Crane.

Example for Determining Pressure Rating Limits:

Seal: 50.8mm/2" Diameter Type 5620
Operating Mode: Pressurized Dual
Barrier Fluid: Aqueous Solution
Face Materials: Silicon Carbide vs. Silicon Carbide
Operating Temperature: 90°C/194°F
Operating Speed: 2950 rpm

Using the Pressure Rating Limits graph, the maximum pressure would be 18.5 bar g/268 psig.

From the Multiplier Factors chart, apply the multiplier factors for the specific service requirements:

18.5 bar g/268 psig x 0.75 = 13.9 bar g/201 psig

The maximum operating pressure for this 50.8mm/2" Type 5620 seal is 13.9 bar g/201 psig.

TYPE 5620/5620PR

UNIVERSAL CARTRIDGE™ Dual O-Ring Seals

Materials of Construction

SEAL COMPONENTS	MATERIALS	
Description	**Standard**	**Options**
Face/Primary Ring	Resin-Impregnated Carbon	Sintered Silicon Carbide Nickel Binder Tungsten Carbide
Seat/Mating Ring	Sintered Silicon Carbide	Nickel Binder Tungsten Carbide
Sleeve Gland Collar Gland Adapter Sleeve Adapter Retainer Drive Ring Anti-Extrusion Ring	316 Stainless Steel	Alloy 20CB3 SS (UNS N8020) Alloy C-276 (UNS N10276) Titanium
Spring	Alloy C-276 (UNS N10276)	—
O-Ring	Fluoroelastomer Ethylene Propylene	Perfluoroelastomer Nitrile Neoprene
Gland Gasket	Glass-Filled PTFE	—

Application Criteria

The Type 5620 and 5620PR Cartridge seals may be customized for specific installations after review and evaluation by John Crane Engineering. The following data is needed to evaluate the proposed service:

- Make and Model of Equipment
- Shaft or Sleeve OD
- Direction of Shaft Rotation Viewed from Drive End
- Seal Cavity Dimensions
- Buffer/Barrier Fluid
- Process Fluid
  - Specific Gravity
  - Box Pressure
  - Vapor Pressure
  - Temperature
  - Viscosity
- Speed

North America
Morton Grove, Illinois USA
Tel: 1-847-967-2400
Fax: 1-847-967-3915
1-800-SEALING

Europe, Middle East, Africa
Slough, UK
Tel: 44-1753-224000
Fax: 44-1753-224224

Latin America
São Paulo, Brazil
Tel: 55-11-3049-9979
Fax: 55-11-3849-4511

Asia Pacific
Singapore
Tel: 65-222-9161
Fax: 65-223-5085

For your nearest John Crane facility, please contact one of the locations above.

If the products featured will be used in a potentially dangerous and/or hazardous process, your John Crane representative should be consulted prior to their selection and use. In the interest of continuous development, John Crane Companies reserve the right to alter designs and specifications without prior notice. It is dangerous to smoke while handling products made from PTFE. Old and new PTFE products must not be incinerated.