TYPE 5625/5625PR

UNIVERSAL CARTRIDGE™ Dual Metal Bellows Seals

A – Seat/Mating Ring
B – Face/Primary Ring
C – Metal Bellows Seal Head
D – Sleeve
E – Gland

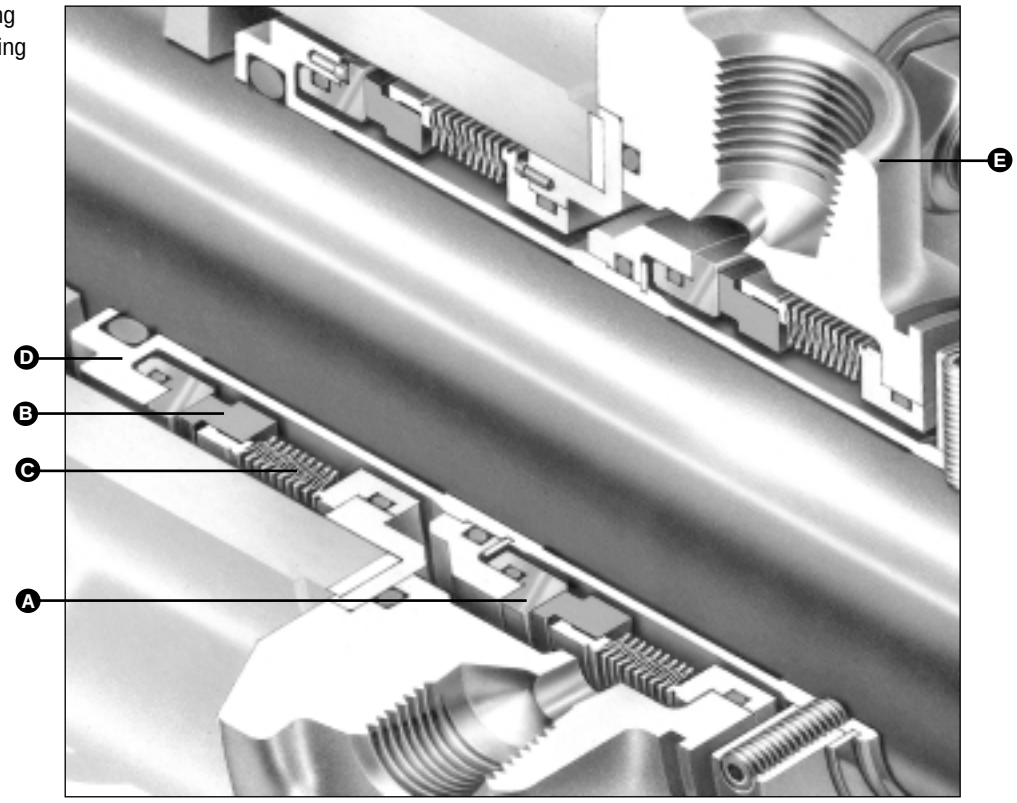

Product Description

The Universal Cartridge 5600 Series is a modular cartridge seal family that includes interchangeable elastomer bellows, metal bellows, and elastomer O-ring pusher seal designs.

- The Type 5625 and 5625PR dual seal arrangements incorporate a Sealol® edge welded metal bellows seal head.
- Primary and mating ring reverse balance designs allow for ID or OD pressurization, which permits the dual seal to operate as a tandem or double. Positive seal face closing forces are maintained in an upset pressure reversal situation.
- OD pressurization of the outboard seal avoids subjecting components to high tensile stresses and achieves improved cooling. On vertical installations, it allows venting of entrapped air.

Design Features

- Reversible Seal Heads
- Tangential Inlet and Outlet Pipe Connections
- ANSI B73.1M and DIN 24960 Pump-Compliant
- Optimized Pressure Balanced Design
- Setscrewless Outboard Seal Drive
- Chemical-Resistant Metal Bellows Secondary Seal

Performance Capabilities

- Temperature:
  -29°C to 204°C/-20°F to 400°F
- Pressure:
  21 bar g/300 psig
- Speed:
  Up to 25 m/s/5000 fpm
- End Play/Axial Float Allowance:
  0.13mm/0.005"
- Runout/Out of Squareness:
  0.05mm/0.002"

TYPE 5625/5625PR

UNIVERSALCARTRIDGE™ Dual Metal Bellows Seals

Type 5625 Typical Arrangement/Dimensional Data

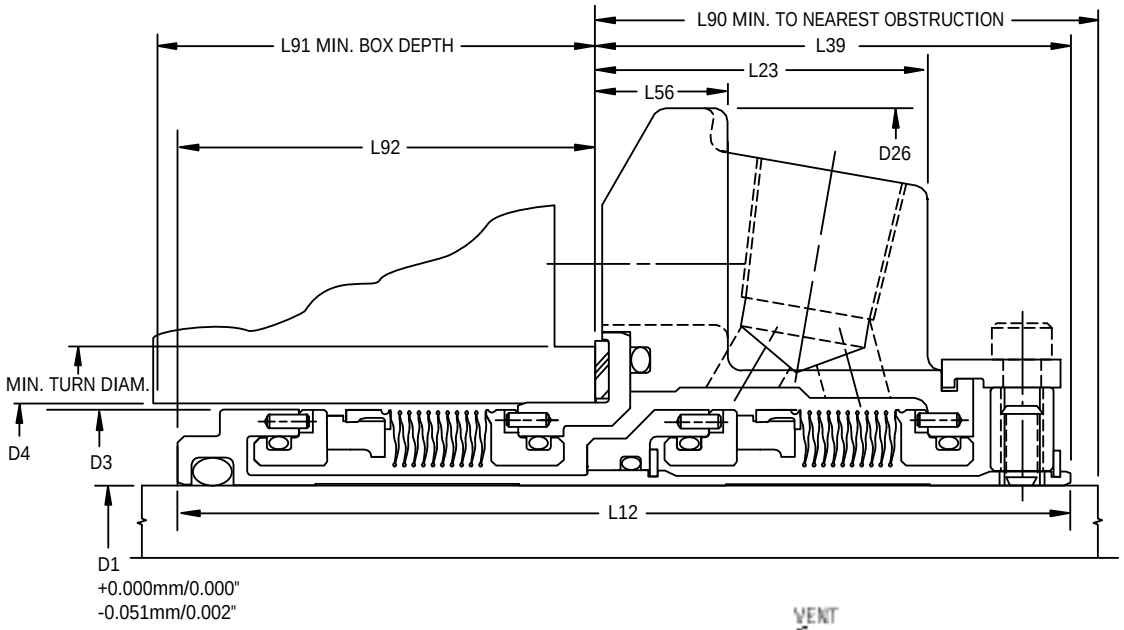

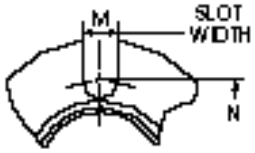

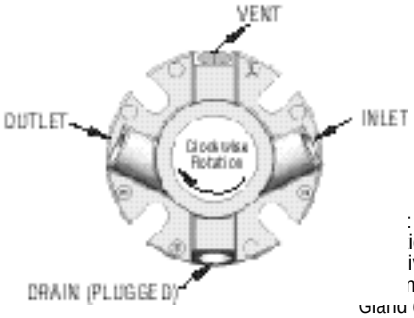

ion of view is from
iver end of pump. For
ntial tappings only.
Gland can be rotated to fit both
DIN and ANSI pump type.

Type 5625PR Typical Arrangement/Dimensional Data

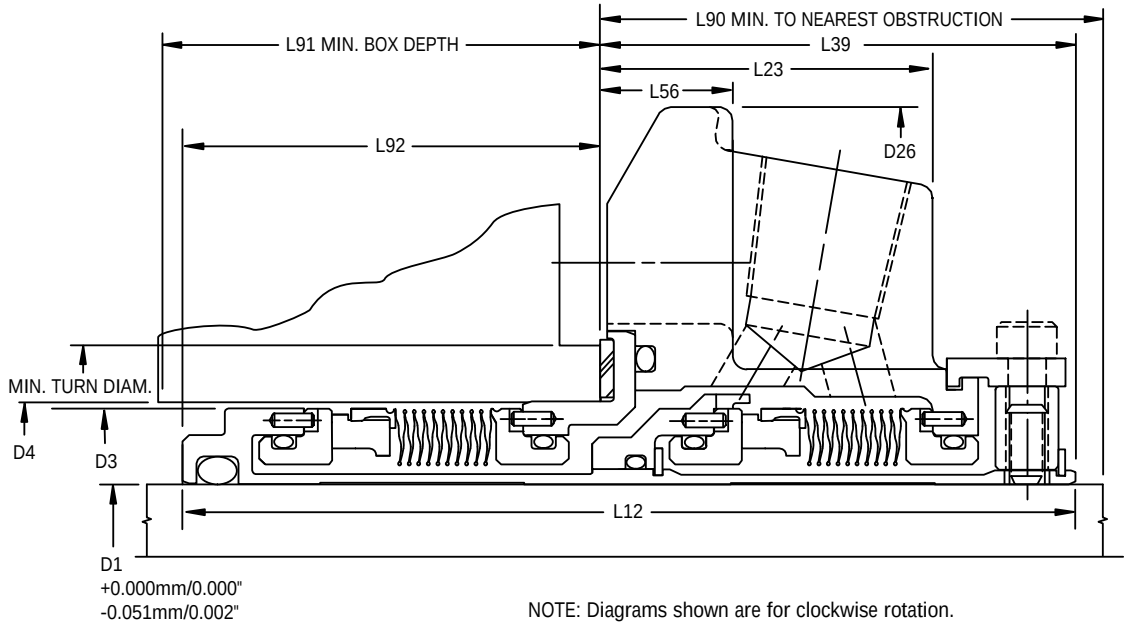

NOTE: Diagrams shown are for clockwise rotation.
For counter-clockwise shaft rotation, consult John Crane Engineering.

TYPE 5625/5625PR

UNIVERSAL CARTRIDGE™ Dual Metal Bellows Seals

Maximum Pressure Limits

Tandem Type 5625*
Process Pressure
21 bar g/ 300 psig

Double Type 5625*	
Barrier Fluid Pressure**	**Inboard Seal Internal Pressure Rating*****
21 bar g/ 300 psig	2-4 bar g/20-50 psig (Norm.) 10 bar g/150 psig (Max. Operating) 21 bar g/300 psig (Max. Static)

* Barrier fluid pressure relative to seal chamber pressure (API Plan 52 or 53) determines usage of the cartridge. As a tandem, the buffer pressure is lower than process pressure; or as a double, the barrier pressure is higher than process fluid pressure to be sealed.

** John Crane Engineering recommends barrier fluids having a viscosity less than 14cSt/65 SSU and fluid lubricity that is equal to or better than water at 38˚C/100˚F.

*** Inboard seal (Process side) internal pressure rating is defined as the Barrier Fluid Pressure minus the Seal Chamber Throat Pressure.

Materials of Construction

SEAL COMPONENTS	MATERIALS	
Description	**Standard**	**Options**
Face/Primary Ring	Resin-Impregnated Carbon	Silicon Carbide Nickel Binder Tungsten Carbide
Seat/Mating Ring	Silicon Carbide	Nickel Binder Tungsten Carbide
Sleeve Gland Collar Gland Adapter Sleeve Adapter	316 Stainless Steel	Alloy 20CB3 SS Alloy C-276 (UNS N10276)
O-Ring	Fluoroelastomer Ethylene Propylene	Perfluoroelastomer Buna-N
Bellows	Alloy 20CB3 SS	Alloy C-276 (UNS N10276)

TYPE 5625/5625PR

UNIVERSAL CARTRIDGE™ Dual Metal Bellows Seals

Type 5625/5625PR Dimensional Data (inches)

Seal Size/D1 (inches)	D3	D4 Min.	D4 Max.	D26	L12	L23	L39	L56	L90	L91	L92	M	N
1.000	1.564	1.625	1.889	4.000	3.705	1.353	1.954	0.531	2.000	1.876	1.751	0.525	2.805
1.125	1.689	1.750	2.015	4.125	3.851	1.446	2.062	0.531	2.125	1.914	1.789	0.525	2.933
1.250	1.812	1.875	2.294	4.250	3.851	1.446	2.062	0.531	2.125	1.914	1.789	0.525	3.213
1.375	1.939	2.000	2.421	4.375	3.851	1.446	2.062	0.531	2.125	1.914	1.789	0.525	3.338
1.500	2.187	2.250	2.680	4.875	3.995	1.487	2.125	0.593	2.187	1.995	1.870	0.525	3.599
1.625	2.312	2.375	2.812	5.000	3.995	1.487	2.125	0.593	2.187	1.995	1.870	0.562	3.766
1.750	2.420	2.480	2.918	5.250	3.995	1.487	2.125	0.593	2.187	1.995	1.870	0.562	3.875
1.875	2.562	2.625	2.918	5.250	3.995	1.487	2.125	0.593	2.187	1.995	1.870	0.562	3.875
2.000	2.687	2.750	3.015	5.500	4.355	1.601	2.312	1.063	2.375	2.167	2.042	0.562	4.000
2.125	2.812	2.875	3.360	5.859	4.355	1.601	2.312	0.593	2.375	2.167	2.042	0.687	4.469
2.250	2.937	3.000	3.485	6.500	4.355	1.601	2.312	0.593	2.375	2.167	2.042	0.687	4.566
2.375	3.062	3.125	3.610	6.500	4.545	1.717	2.466	0.625	2.528	2.204	2.079	0.687	4.719
2.500	3.312	3.375	3.891	6.750	4.545	1.717	2.563	0.625	2.625	2.107	1.982	0.687	5.000
2.625	3.562	3.625	4.062	6.750	4.594	1.625	2.500	0.625	2.562	2.219	2.094	0.687	5.170
2.750	3.562	3.625	4.062	6.750	4.594	1.625	2.500	0.625	2.562	2.219	2.094	0.687	5.170
2.875	3.687	3.750	4.186	7.000	4.594	1.725	2.500	0.625	2.562	2.219	2.094	0.687	5.312
3.000	3.937	4.000	4.469	7.750	4.594	1.787	2.562	0.685	2.625	2.157	2.032	0.812	5.720

Type 5625/5625PR Oversize Bore Dimensional Data (inches)

Seal Size/D1 (inches)	D3	D4 Min.	D4 Max.	D26	L12	L23	L39	L56	L90	L91	L92	M	N	Min. Turn Diam.
1.375	1.939	2.875	3.023	5.375	3.851	1.446	2.062	0.625	2.125	1.914	1.789	0.562	4.062	3.268
1.750	2.420	3.500	3.925	6.500	3.995	1.487	2.125	0.656	2.187	1.995	1.870	0.687	5.093	3.885
1.875	2.562	3.625	3.734	6.500	3.995	1.487	2.125	0.656	2.187	1.995	1.870	0.687	5.093	4.006
2.125	2.798	3.875	4.250	7.156	4.355	1.570	2.282	0.749	2.407	2.198	2.073	0.687	5.687	4.264
2.500	3.312	4.750	4.875	8.000	4.545	1.697	2.407	0.656	2.532	2.263	2.138	0.687	6.062	5.139
2.625	3.562	4.625	4.740	8.000	4.594	1.788	2.500	0.749	2.562	2.219	2.094	0.687	6.062	5.000
2.750	3.551	4.750	4.875	8.000	4.594	1.697	2.407	0.656	2.532	2.312	2.187	0.687	6.062	5.139

Type 5625/5625PR Dimensional Data (mm)

Seal Size/D1 (mm)	Seal Size Code	D3	D4 Min.	D4 Max.	D26	L12	L23	L39	L56	L90	L91	L92	M	N
24	0240	39.7	41.3	48.0	101.6	94.1	34.4	49.6	13.5	50.8	47.7	44.5	13.3	71.2
25	0250	39.7	41.3	48.0	101.6	94.1	34.4	49.6	13.5	50.8	47.7	44.5	13.3	71.2
28	0280	42.9	44.5	51.2	104.8	97.8	36.7	52.4	13.5	54.0	48.6	45.4	13.3	74.5
30	0300	44.8	46.1	56.5	108.0	97.8	36.7	52.4	13.5	54.0	48.6	45.4	13.3	79.9
32	0320	46.0	47.6	58.3	108.0	97.8	36.7	52.4	13.5	54.0	48.6	45.4	13.3	81.6
33	0330	49.3	50.8	61.5	111.1	97.8	36.7	52.4	13.5	54.0	48.6	45.4	13.3	84.8
35	0350	49.3	50.8	61.5	111.1	97.8	36.7	52.4	13.5	54.0	48.6	45.4	13.3	84.8
38	0380	55.6	57.2	68.1	123.8	101.5	37.8	54.0	15.1	55.5	50.7	47.5	13.3	91.4
40	0400	58.7	60.3	71.4	127.0	101.5	37.8	54.0	15.1	55.5	50.7	47.5	14.3	95.7
43	0430	61.5	63.0	74.1	133.4	101.5	37.8	54.0	15.1	55.5	50.7	47.5	14.3	98.4
45	0450	61.5	63.0	74.1	133.4	101.5	37.8	54.0	15.1	55.5	50.7	47.5	14.3	98.4
48	0480	65.1	66.7	74.1	133.4	101.5	37.8	54.0	15.1	55.5	50.7	47.5	14.3	98.4
50	0500	68.3	70.0	76.6	139.7	110.6	40.7	58.7	27.0	60.3	55.0	51.9	14.3	101.6
53	0530	71.4	73.0	85.3	148.8	110.6	40.7	58.7	15.1	60.3	55.0	51.9	17.4	113.5
55	0550	73.0	75.0	85.3	148.8	110.6	40.7	58.7	15.1	60.3	55.0	51.9	17.4	113.5
58	0580	74.6	76.2	88.5	165.1	110.6	40.7	58.7	15.1	60.3	55.0	51.9	17.4	116.0
60	0600	77.8	79.4	91.7	165.1	115.4	43.6	62.6	15.9	64.2	56.0	52.8	17.4	119.9
63	0630	84.1	85.7	98.8	171.5	115.4	43.6	65.1	15.9	66.7	53.5	50.3	17.4	127.0
65	0650	84.1	85.7	98.8	171.5	115.4	43.6	65.1	15.9	66.7	53.5	50.3	17.4	127.0
68	0680	90.5	92.1	103.2	171.5	116.7	41.3	63.5	15.9	65.1	56.4	53.2	17.4	131.3
70	0700	90.5	92.1	103.2	171.5	116.7	41.3	63.5	15.9	65.1	56.4	53.2	17.4	131.3
75	0750	100.0	101.6	113.5	196.9	116.7	45.4	65.1	17.4	66.7	54.8	51.6	20.6	145.3

TYPE 5625/5625PR

UNIVERSALCARTRIDGE™ Dual Metal Bellows Seals

Pressure Rating Limits

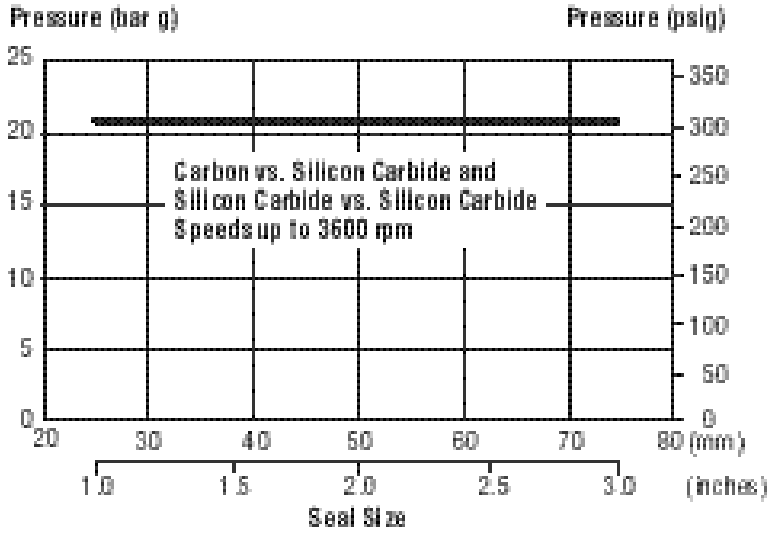

1. When Carbon face is used, temperature limit is 200°C/393°F.
2. For Silicon Carbide vs. Tungsten Carbide temperature limits, consult John Crane Engineering.

Multiplier Factors

	Selection Considerations	Multiplier Factor
Sealed Fluid Lubricity	Petrol/Gasoline, Kerosene, or Better	x 1.00
	Water and Aqueous Solutions	x 0.75
	Light Hydrocarbons (Specific Gravity <0.65, etc.)	x 0.60
Sealed Fluid Temperature	Up to 80°C/175°F	x 1.00
	Above 80°C to 120°C/175°F to 250°F	x 0.90
	Above 120°C to 180°C/250°F to 355°F	x 0.80
	Above 180°C to 230°C/355°F to 445°F	x 0.65

Example for Determining Pressure Rating Limits:

Seal: 50.8mm/2" Diameter Type 5625
Operating Mode: Pressurized Dual
Barrier Fluid: Aqueous Solution
Face Materials: Silicon Carbide vs. Silicon Carbide
Operating Temperature: 80°C/175°F
Operating Speed: 2950 rpm

Using the Pressure Rating Limits graph, the maximum pressure would be 21 bar g/300 psig.

From the Multiplier Factors chart, apply the multipliers for the specific service requirements to determine the maximum operating pressure for the application:

21 bar g/300 psig x 0.75 x 0.90 = 14 bar g/203 psig

The maximum operating pressure of this 50.8mm/2" Type 5625 seal is 14 bar g/203 psig.

TYPE 5625/5625PR

UNIVERSAL CARTRIDGE™ Dual Metal Bellows Seals

Application Criteria

The Type 5625 and 5625PR Cartridge seals can be customized for specific installations after review and evaluation by John Crane Engineering. The following data is needed to evaluate the proposed service.

- Make and Model of Equipment
- Shaft or Sleeve OD
- Direction of Shaft Rotation Viewed from Drive End
- Seal Cavity Dimensions
- Buffer/Barrier Fluid
- Process Fluid
  - Specific Gravity
  - Box Pressure
  - Vapor Pressure
  - Temperature
  - Viscosity
- Speed

John Crane

North and Latin Americas
Morton Grove, Illinois USA

Tel: 1-847-967-2400
Fax: 1-847-967-3915
1-800-SEALING

Europe, Middle East, Africa
Slough, UK

Tel: 44-1753-224000
Fax: 44-1753-224224

Asia Pacific
Singapore

Tel: 65-222-9161
Fax: 65-223-5035

TI Group
Global Specialised Engineering

For your nearest John Crane facility, please contact one of the locations above.

If the products featured will be used in a potentially dangerous and/or hazardous process, your John Crane representative should be consulted prior to their selection and use. In the interest of continuous development, John Crane Companies reserve the right to alter designs and specifications without prior notice. It is dangerous to smoke while handling products made from PTFE. Old and new PTFE products must not be incinerated.