Europe
Slough, UK

Tel 44-1753-224000
Fax 44-1753-224224

Latin America
São Paulo, Brazil

Tel 55-11-3371-2500
Fax 55-11-3371-2599

Middle East, Africa, Asia
Dubai, United Arab Emirates

Tel 971-4-3438940
Fax 1971-4-3438970

North America
Morton Grove, Illinois USA

1-800-Sealing
Tel 1-847-967-2400
Fax 1-847-967-3915

John Crane Cyclam
75 rue Robert le Coq
80038 Amiens Cedex 1
France

Tel 0033 (0) 3 22 54 5970
Fax 0033 (0) 3 22 44 4636
E-mail: jccyclam@johncrane.fr

smiths
A part of Smiths Group plc

For the nearest John Crane facility, please contact one of the locations above.

If the products featured will be used in a potentially dangerous and/or hazardous process, your John Crane representative should be consulted prior to their selection and use.
In the interest of continuous development, John Crane Companies reserve the right to alter designs and specifications without prior notice. It is dangerous to smoke while handling products made from PTFE. Old and new PTFE products must not be incinerated.

©2001 John Crane Print Jan 02 www.johncrane.com ISO-Certified QS 9000 B-indseals/Eng

General Purpose
Industrial Seals

Industrial Seals
Range

Cyclam MLE

Cyclam IFH

Cyclam DR

Cyclam PRR

Cyclam EPR

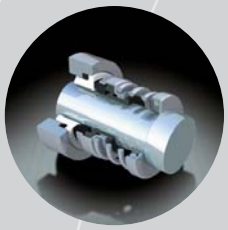
Type 43

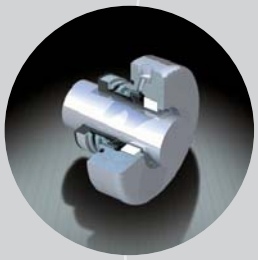
Type 2100

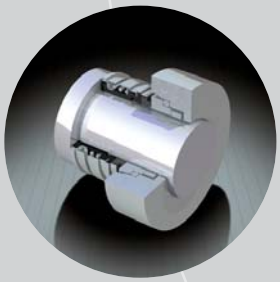
Type 502

Type 1a/2

This catalogue provides an introduction to the John Crane range of Industrial Mechanical Seals that provide a cost-effective solution for high volume requirements. John Crane has applied its world leading technology, design, materials testing and manufacturing to provide a range of seals to meet every need from shower pumps to high-pressure boiler circulating pumps. In a competitive, global industrial market it is easy to compare suppliers on price alone, however the cost of warranty claims and delivery delays can soon eliminate any potential saving. The John Crane Industrial Seal Centre of Excellence has consistently achieved market-leading performance in both production quality and delivery reliability. Combine this with after-sales support including over 1,100 sales engineers and 200 sales/service facilities and you can see why John Crane provides the total solution.

Type MLE

An extremely versatile, high-volume seal designed for small centrifugal water pumps, with one-piece construction to enable easy production line installation. The MLE has a host of applications from washing machines to dishwashers and from shower pumps to swimming pool equipment.

- **Withstands pressures up to 5 bar g**
- **Available in sizes 5mm to 16mm**
- **Smooth outside profile and internal spring prevents contact with sealed medium**
- **Available only with a carbon face**

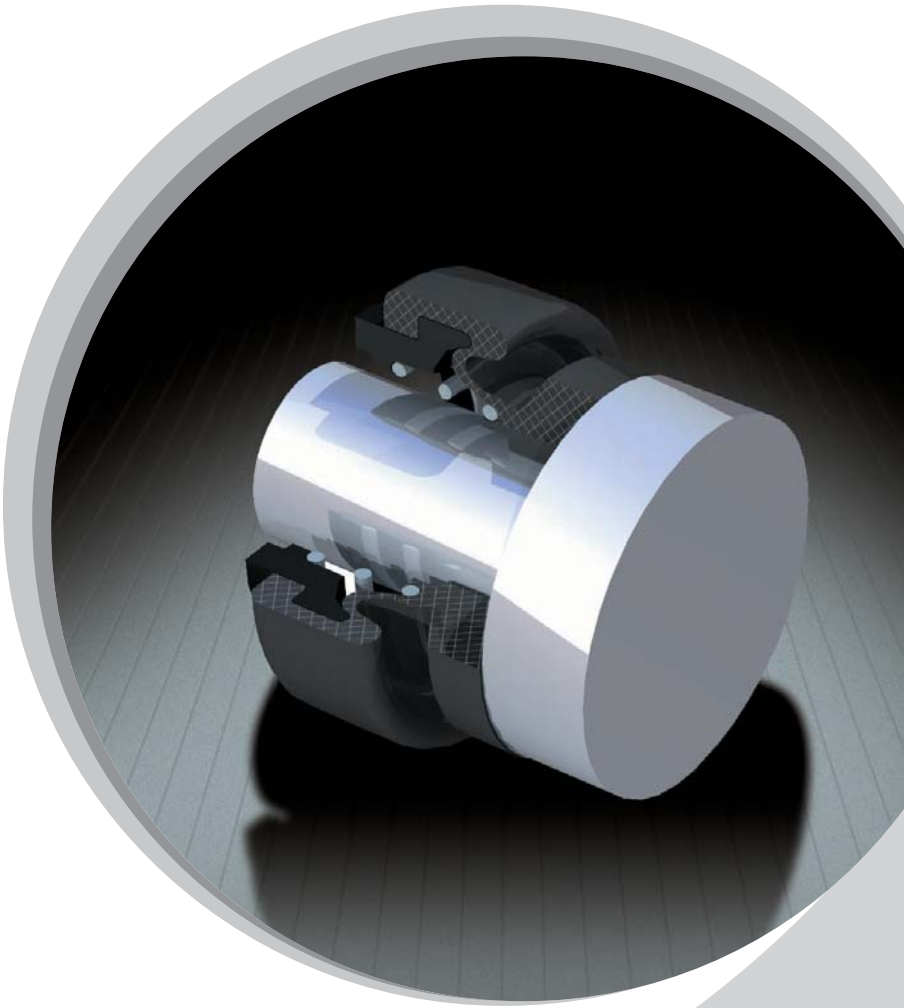

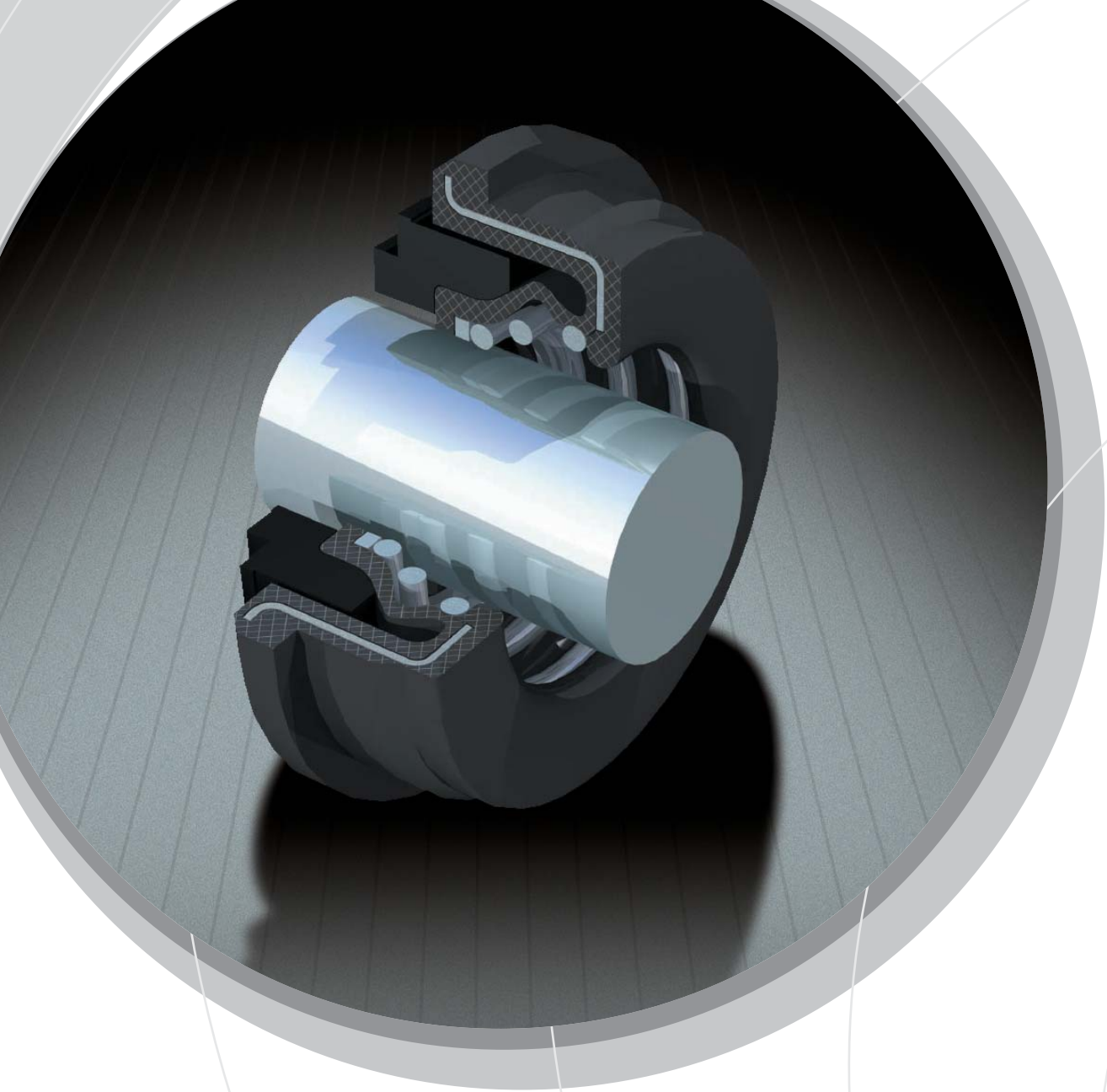

Type IFH

A very high volume stationary seal for water pumps, known for its excellent reliability. The IFH is suitable for a wide variety of applications and is used extensively in automotive and domestic appliance manufacture.

- **Withstands pressures up to 1.5 bar g**
- **Available in sizes 14mm, 18mm and 20.4mm**
- **Available in a wide range of materials**
- **Available as a unitised assembly with seat for automated assembly**

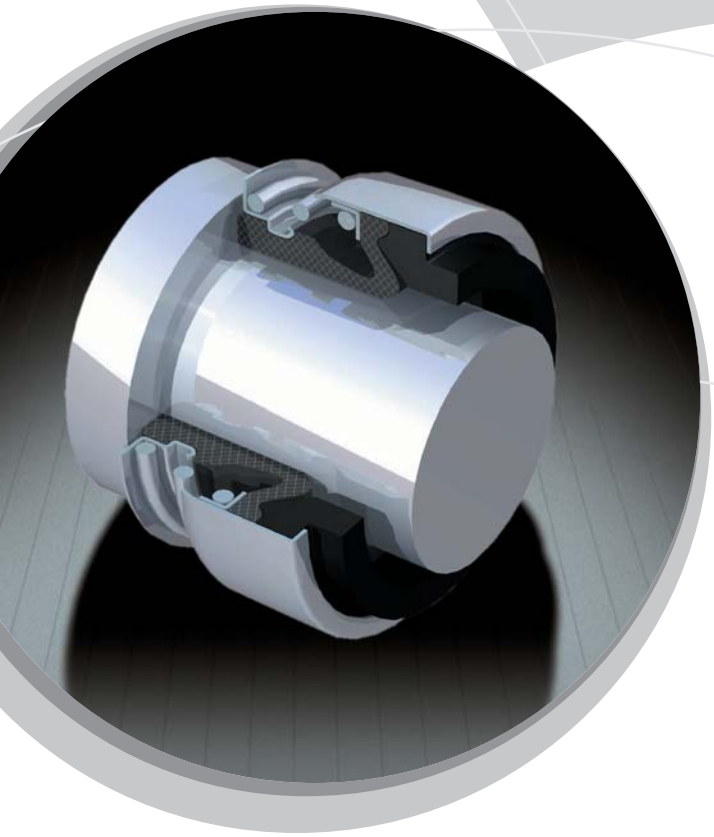

Type DR

A unitised seal suitable for all rotating pumps and machines, the DR has been designed and developed to allow for easy, efficient production line assembly.

- **Withstands pressures up to 6 bar g**
- **Available in sizes 10mm to 25mm**
- **316 stainless steel construction allows use in numerous media**
- **Standard carbon face, also available with hard faces**

Type PRR & EPR

A widely used, multi-purpose unitised seal with many uses across a variety of industries. The proven, compact design of the PRR makes it particularly suitable for situations where axial room is at a premium.

- **Withstands pressures up to 10 bar g**
- **Available in sizes 5mm to 150mm**
- **316 stainless steel construction**
- **Wide choice of faces and elastomers**
- **Supplementary positive drive version (EPR) available**

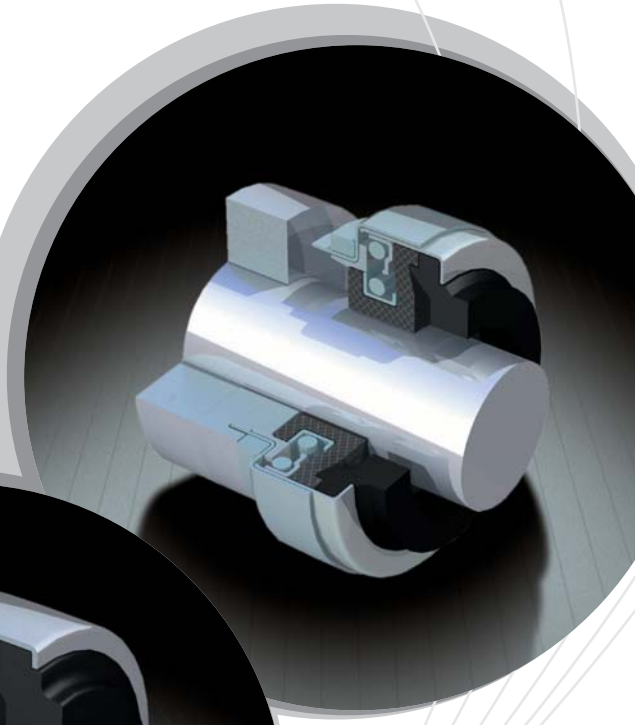

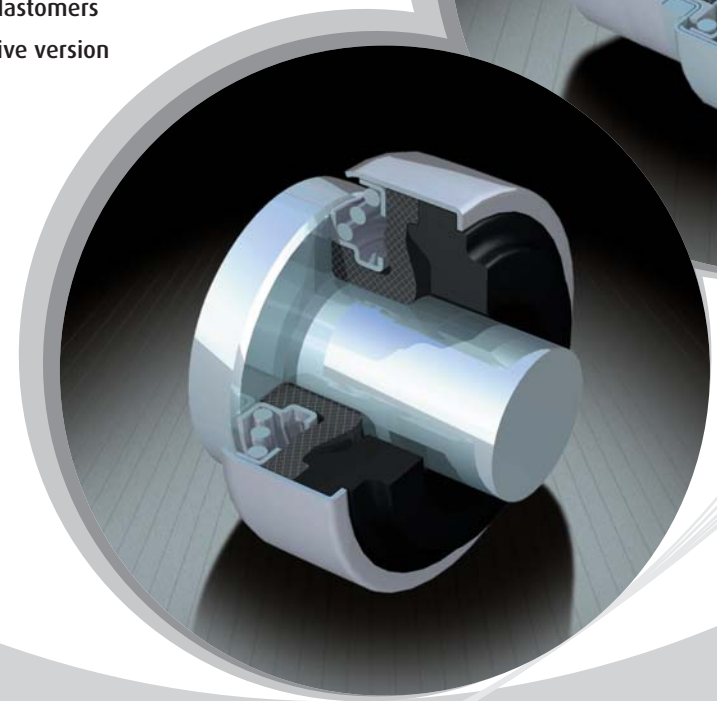

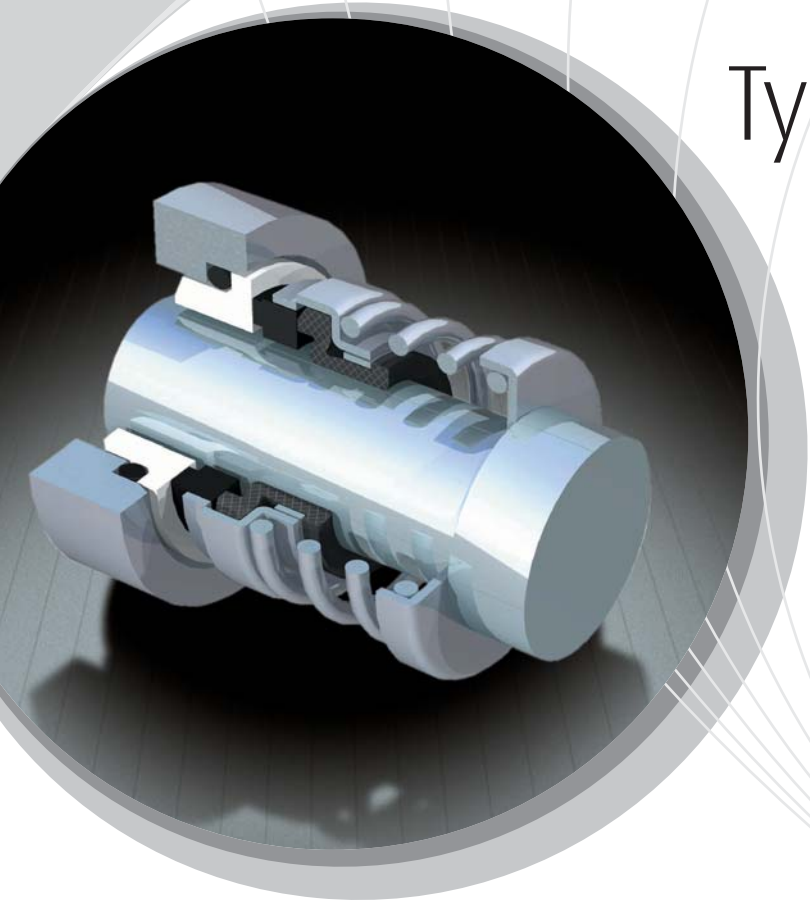

Type 43

Highly versatile seal available in a wide range of standard configurations to fit most pre-established cavities. The 43 spring design accommodates large variances in operating and "build-up" tolerances.

- **Withstands pressures up to 16 bar g**
- **Available in a range of imperial and metric sizes up to 3"/75mm**
- **316 stainless steel construction, available with a wide range of elastomers and face materials**

Type 2100

A unitised elastomeric bellows seal for medium to high volumes, particularly suitable for fractional horsepower motors when used with standard high performance materials. The 2100's innovative bellows and drive band design allows greater tolerance to misalignment.

- **Withstands pressures up to 20 bar g**
- **Available in sizes from 10mm to 75mm**
- **Available in a wide range of imperial and metric sizes, and in a range of operating lengths to suit most equipment**
- **Drive band and elastomeric bellows design compensates automatically for shaft end play and run-out**
- **Latest FEA modelling for optimum reliability**
- **Fully compliant with DIN 24960, ISO 3069 & ANSI B73.1M-1991**

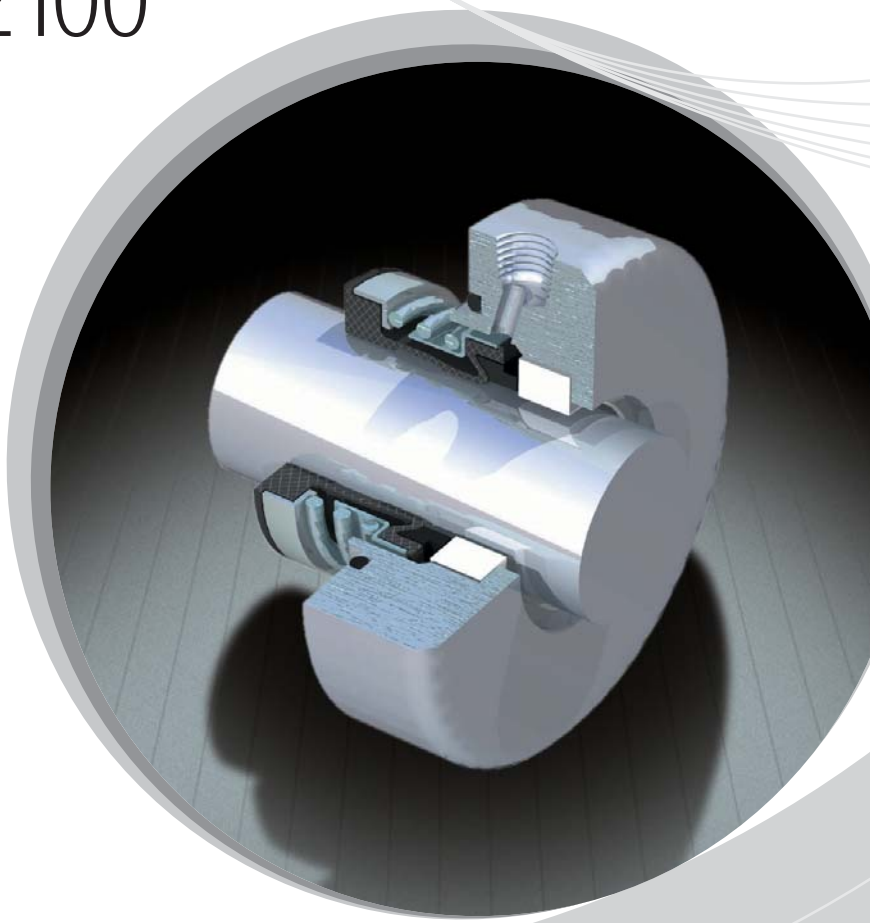

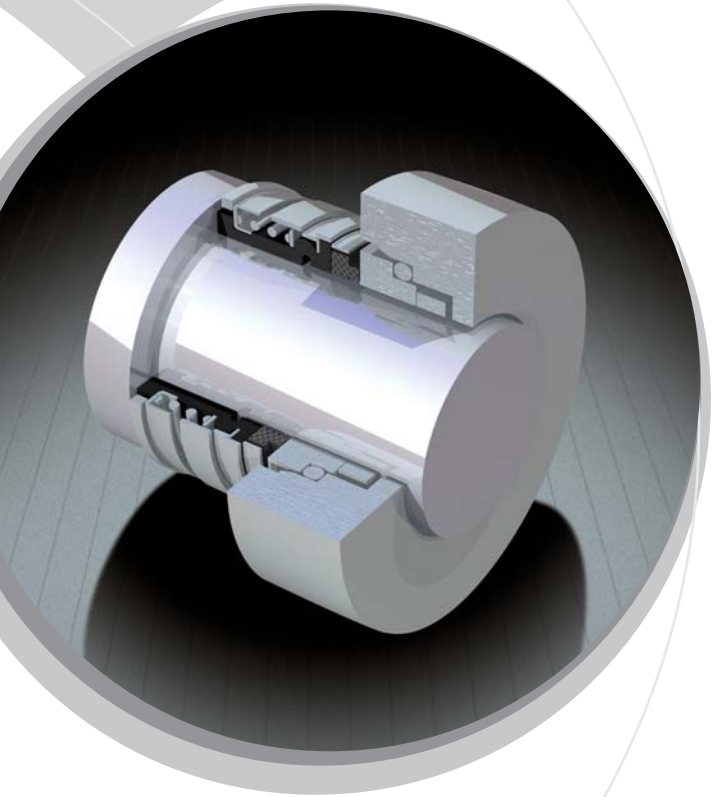

Type 502

The 502 is one of the highest performance elastomeric bellows seals available, with a wide range of applications. Its proven design and unitised construction allows ease of installation, and it is equally suitable for use with light chemical water, hot water and weak acid solutions.

- **Withstands pressures up to 40 bar g**
- **Available in a range of metric sizes**
- **316 stainless steel construction, available with a wide range of facing materials and elastomers**
- **Fully compliant with DIN 24960**

Type 1a/2

A classic general purpose seal regarded by many as representing the industry standard for general duty equipment. The rugged design of the 1a/2 ensures maximum reliability, particularly when applied to waste water treatment and similarly demanding duties.
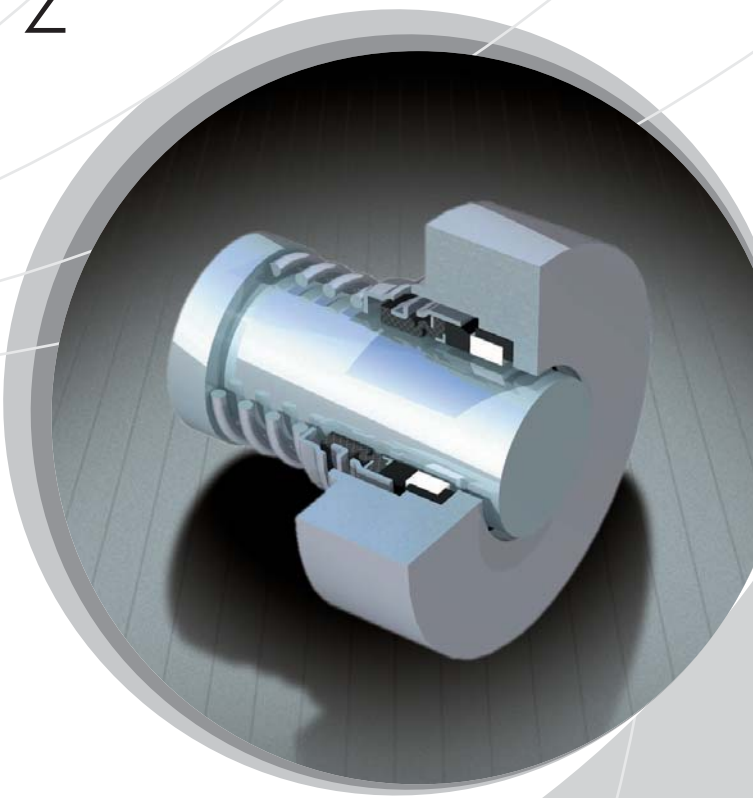
- **Withstands pressures up to 30 bar g**
- **Balanced version available for higher pressures**
- **Available in a wide range of imperial and metric sizes**
- **Design incorporates open single springs, positive drive to the face and heavy duty construction**