TSR

METASTREAM™ Close Coupled Membrane Coupling

A – Replaceable Stainless Steel Flexible Membranes

B – Overload & Anti-fly Protection Collars

C – Anti-Corrosion Treatment

D – Axially Split Spacer for ease of Maintenance

E – Fitted Bolts for Balance Integrity

F – Hubs designed for all short DBSE applications

G – Spigot fit Spacer

H – Locked thread

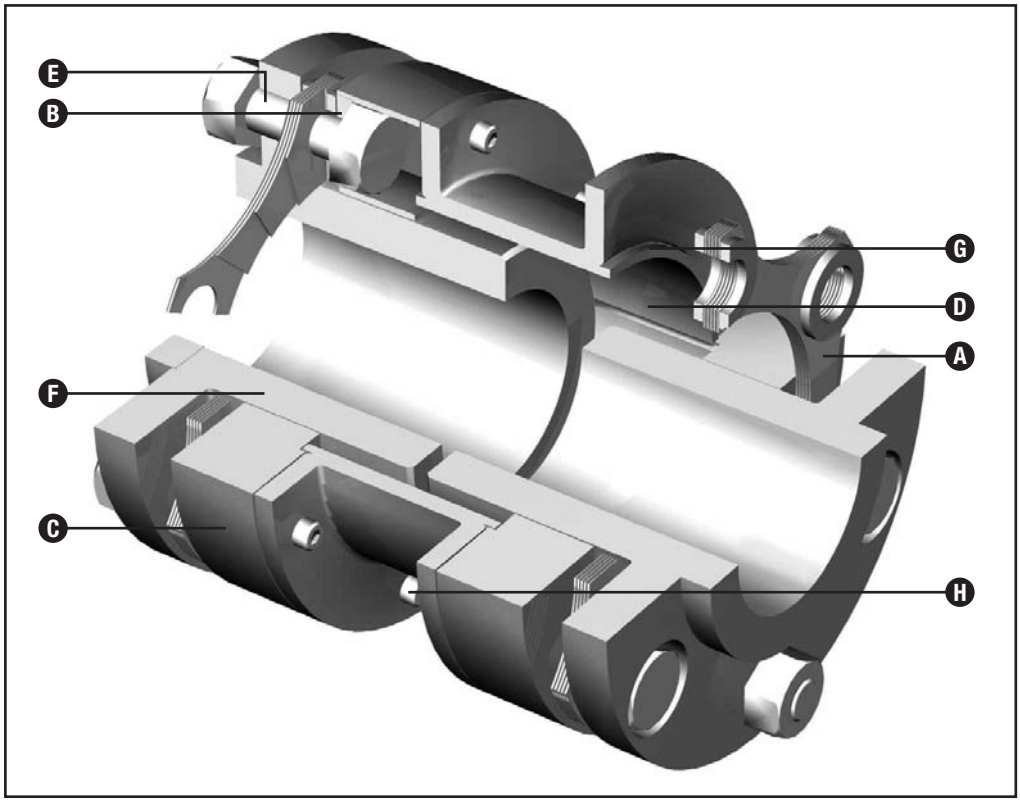

Product Description

The Metastream™ 'TSR' range of membrane couplings has been specifically designed to provide a solution for close coupled machinery. The key benefit of this coupling is the ability to replace membranes without the need to move either of the connected machines.

- Easy maintenance without moving machines
- The motor can be isolated easily be removing the split spacer element
- Close coupled DBSE, fully variable from 3 mm upwards
- Operates in either direction
- Coated carbon steel for corrosion protection
- Choice of hub configuration to suit DBSE
- Designed for the life of the connecting machines.
- AGMA Class 8 intrinsic balance
- Phosphate coating for corrosion protection.

Design Features

- **Fit and Forget:** The TSR coupling is designed for infinite life, and with correct machinery alignment will out last the machines it is connected to
- **Overload Protection:** The coupling is fitted with overload collars to protect the membranes in the event of severe torsional overload
- **Low Imposed Loads:** The membranes have been designed to optimise their torque capability, whilst minimising the reaction forces due to misalignment
- **Zero Maintenance:** The coupling has no relative moving parts, and hence requires no lubrication or routine maintenance
- **Ease of Assembly:** In the unlikely event that coupling does require maintenance the membranes of the TSR coupling can be replaced with out moving the associated machines. Compression bolts are fitted to make it easy to remove the split spacer
- **No Backlash:** The coupling design, with fitted bolts, and torsionally stiff membranes ensures that there is zero backlash. This makes the coupling ideal for drives such as machine tool indexers, printing presses, packaging and all applications where constant speed is crucial.

TSR

METASTREAM™ Close Coupled Membrane Coupling

Technical Data

Coupling Size	Rating kW/ 1000 rpm	Max. Continuous Torque Nm	Peak Overload Torque Nm	Max. Speed rpm	Complete Coupling Weight Kg	Complete Coupling Moment of Inertia Kg.m²
0033	33	315	630	6,400	3.7	0.004
0075	75	715	1,430	5,800	6.5	0.014
0135	135	1,290	2,600	5,000	11.3	0.033
0230	230	2,200	4,400	4,200	18.4	0.079
0350	350	3,350	6,700	3,800	27.7	0.152
0500	500	4,780	9,600	3,600	38.8	0.279
0740	740	7,070	14,000	3,400	53.9	0.477
0930	930	8,880	17,600	3,200	72.1	0.758
1400	1,400	13,370	26,750	3,000	96.7	1.237

Typical Arrangements

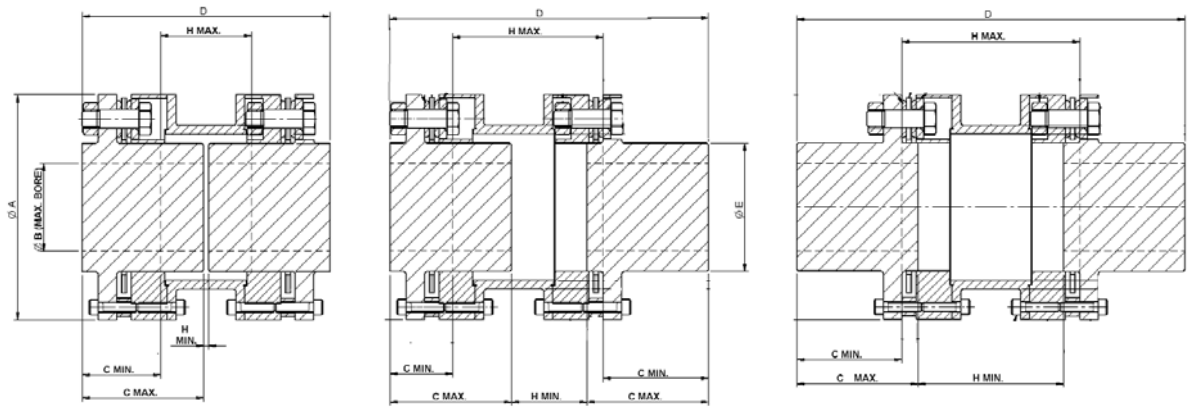

TSRC **TSRH** **TSRS**

Dimensional Data (mm)

Coupling Size	A	*Max. Bore B	C max	TSRC C min	TSRC H min	TSRC H max	TSRC D	TSRH C min	TSRH H min	TSRH H max	TSRH D	TSRS C min	TSRS H min	TSRS H max	TSRS D
0033	98	35	55	38.5	3	36	113	29.0	36	69	146	48.0	69	83	179
0075	125	50	63	45.0	3	39	129	35.5	39	75	165	54.5	75	92	201
0135	148	60	75	54.0	5	47	155	43.5	47	89	197	64.5	89	110	239
0230	178	75	85	61.0	5	53	175	48.5	53	101	223	73.5	101	124	271
0350	202	85	98	70.5	5	60	201	56.5	60	115	256	84.5	115	142	311
0500	228	100	109	79.0	7	67	225	64.5	67	127	285	93.5	127	158	345
0740	255	110	120	86.5	7	74	247	69.5	74	141	314	103.5	141	174	381
0930	279	120	134	96.5	7	82	275	77.5	82	157	350	115.5	157	194	425
1400	309	130	144	103.5	7	88	295	82.5	88	169	376	124.5	169	208	457

Dimensions should not be used for construction. Certified dimensions furnished upon request.

* Maximum bored hubs are based on standard DIN/BS rectangular key and for hubs that are not reduced in length.

Unless otherwise specified, parallel bores will be machined to an H7 tolerance, with Js9 key-ways to DIN 6885, ISO R773 or BS 46 Pt1 (inch).

TSR

METASTREAM™ Close Coupled Membrane Coupling

Selection Procedure

1. Select appropriate service factor SF.
2. Calculate the coupling rating R from

   $$R = \frac{kW \times 1000 \times SF}{N}$$

   Where:

   kW = rated power for drive equipment (kW)

   N = speed (rev./min).
3. Select a coupling with the same or higher rating.
4. Check DBSE and select configuration.
5. Check the hub bore capacity is suitable, if not select a larger size coupling.
6. Check peak torque capability is suitable for application.
7. Check speed capability.
8. Specify Distance Between Shaft Ends – (DBSE) as appropriate.

Example:

150 kW electric motor connected to a centrifugal pump at 2960 rpm with a 10 mm DBSE.

SF = 1.0

$$R = \frac{150 \times 1000 \times 1.0}{2960}$$

R = 50.7 kW per 1000 rpm

Selection: TSRC – 0075

DBSE is between 3 and 39 mm

Maximum parallel shaft bore is 50 mm

Peak torque capability – 1430 Nm

Maximum speed capability is 5,800 rpm.

Designation **– TSRC – 0075 – 0077 - 0000**

Actual SF = 1.48

Load Factor SF

Torque Variation	Typical Application	Service Factor
Constant Torque	Centrifugal Pump Centrifugal Compressor Axial Compressor Centrifugal Blower	1.0*
Slight Torque Fluctuation	Screw Compressor Gear, Lobe and Vane Pumps Forced Draft Fan Medium Duty Mixer Lobe Blower	1.5
Substantial Torque Fluctuations	Reciprocating Pumps Heavy Duty Mixers Induced Draft Fans	2.0

The examples given are for typical machines and are empirically based guidelines. Knowledge of actual torque characteristics may indicate a different service factor. For example, variable-speed electric motors may exhibit a fluctuating torque characteristic. Consult John Crane for advice.

* Use a minimum service factor of 1.25 on electric motor drives through a gearbox.

Available Options

- Spark-resistant couplings for hazardous zone operation
- Special materials for low temperature applications and/or higher corrosion resistance.

Consult John Crane for any other special requirements. Metastream couplings can be adapted to suit virtually all power transmission coupling needs.

TSR

METASTREAM™ Close Coupled Membrane Coupling

Coupling Alignment

Correct installation and alignment of couplings is essential for reliable machinery performance.

John Crane supplies a variety of shaft alignment equipment and offers alignment-training courses.

Coupling Size	* Axial Misalignment +/- mm	** Lateral Misalignment +/- mm
0033	1.25	0.7
0075	1.75	0.7
0135	2.00	0.9
0230	2.50	1.0
0350	3.00	1.2
0500	3.25	1.3
0740	3.75	1.4
0930	4.00	1.6
1400	4.50	1.7

These values are maximums for each type of misalignment. It is recommended that the coupling is initially aligned to 10% of these values to allow for inevitable movements during the life of the machines.

* Meets NEMA end float specification without modification.

** Values based on angular deflection of 1/2° per end.

The angular and axial restoring forces are available on request. The axial force has a non-linear characteristic, which can de-tune systems to prevent high amplitude axial vibration.

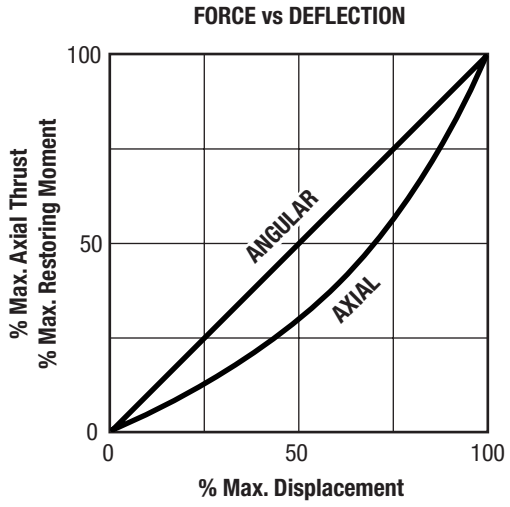

Balance Condition

This coupling is designed with a high inherent balance, due to the precision of the manufacturing process. It is important that all parts are carefully stored and fitted to maintain this integrity.

The inherent balance of the TSR range meets AGMA standard 9000-C90 class 8. The maximum operating speeds listed in the table on page 2 are on the basis of this AGMA class 8 characteristic, to provide a general guide to maximum permissible speed. If higher speeds are required contact John Crane for an alternative coupling selection or special balance if required.

Europe
Slough, UK
Tel: 44-1753-224000
Fax: 44-1753-224224

Latin America
São Paulo, Brazil
Tel: 55-11-3371-2500
Fax: 55-11-3371-2599

Middle East, Africa, Asia
Dubai, United Arab Emirates
Tel: 971-4-3438940
Fax: 971-4-3438970

North America
Morton Grove, Illinois USA
1-800-SEALING
Tel: 1-847-967-2400
Fax: 1-847-967-3915

smiths

For your nearest John Crane facility, please contact one of the locations above.

If the products featured will be used in a potentially dangerous and/or hazardous process, your John Crane representative should be consulted prior to their selection and use. In the interest of continuous development, John Crane Companies reserve the right to alter designs and specifications without prior notice. It is dangerous to smoke while handling products made from PTFE. Old and new PTFE products must not be incinerated.

©2004 John Crane Print 10/04 **www.johncrane.com** ISO 9001, ISO 14001, ISO/TS 16949 Certified. Details available on request. S-**TSR/Eng**