High Performance Low Emission Pusher Seals

API 682 Type A

Arrangements 1, 2, and 3

Qualification Tested

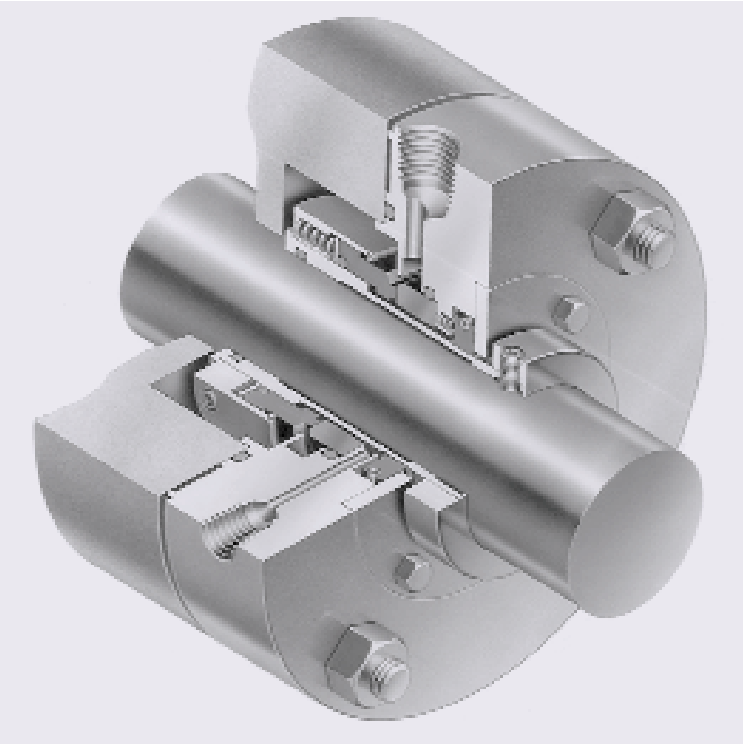

Type 1648 - Single Seal

Type 2648 - Dual Unpressurized Seal

Type 3648 - Dual Pressurized Seal

Type 1648, 2648 and 3648 seals evolved from the successful, proven John Crane Type 48 design, the preferred choice for safe, reliable, single and dual unpressurized and pressurized seal arrangements in petroleum services for more than five years. These are dependable, engineered mechanical seals developed specifically to attain Maximum Achievable Control Technology (M.A.C.T.) compliance in hydrocarbons and other VOCs. Type 1648 single seals typically control emissions to less than 200 ppm.

Design Features

- Complies with API 682 technical design requirements
- Available in single and dual arrangements
- Standard materials per API 682
- Fits API 682 Table 1 and 2 seal chambers
- Computer optimized low emission seal face designs
- Qualification Tested
- Distributed flush on single seals optimizes circulation of liquid at faces and prevents trapped vapor
- Test proven for optimal circulation flow, dual seals have standard radial inlet and tangetial outlet buffer/barrier fluid connections

Maximum Operating Limits

- Temperatures: - 40˚C to 260˚C / - 40˚F to +500˚F
- Pressures: Up to 69 bar g / 1000 psig
- Speeds: Up to 25 m/s / 5000 fpm

Consult John Crane for higher speed and pressure applications.

Standard Materials of Construction

- Hardware: 316 SS
- Springs: Hastelloy™ C
- Primary Ring: Premium Grade Carbon
- Mating Ring: Reaction Bonded Silicon Carbide
- Secondary Seals: Fluoroelastomer
- Throttle Bushing: Premium Grade Carbon

™ Hastelloy is a trademark of Cabot Corp.

Type 1648

The Type 1648 is a single cartridge seal designed to provide low emissions/leakage for most refinery applications. It is applied in Non-Hydrocarbon, Non-Flashing Hydrocarbon, and Flashing Hydrocarbon services. Process leakage is further contained with a floating segmented bushing allowing it to be transported to a suitable drain or vapor recovery system. It is available in single spring and stationary seal versions.

Type 2648

The Type 2648 is a dual unpressurized cartridge seal designed to provide additional safety for hazardous applications and those where the sealing environment needs to be controlled. The inboard seal design utilizes the same low emission/leakage technology as the Type 1648. The outboard seal provides additional containment in conjunction with an API Flush Plan 52.

The 3648

The Type 3648 is a dual pressurized cartridge seal designed for maximum containment of hazardous fluids and light hydrocarbons. The inboard seal is double balanced to provide a positive seal with pressure from either direction. The outboard seal retains the barrier fluid using either an API Flush Plan 53 or 54. The Type 3648 seal can be utilized as a Type 2648 within specified limits (consult John Crane).

Type 1648 Single Seal

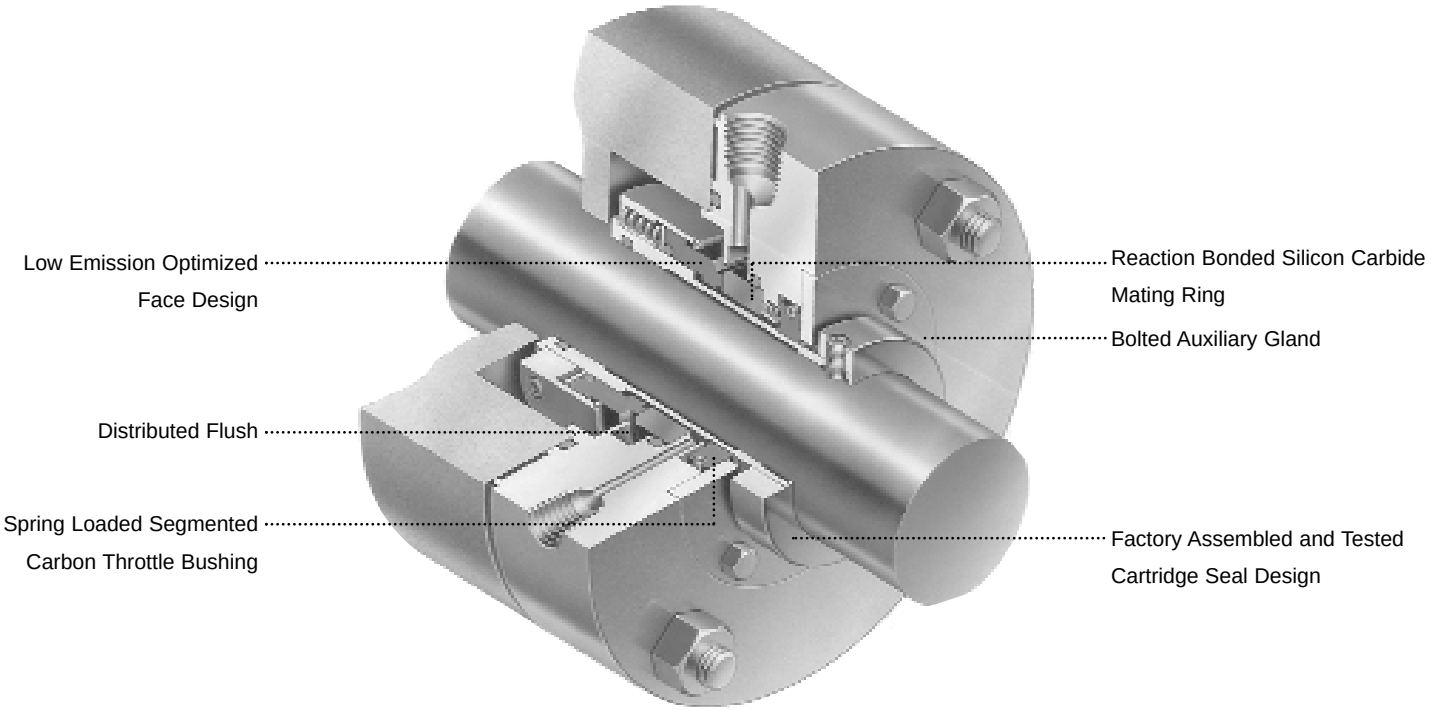

Type 2648 Dual Unpressurized Seal

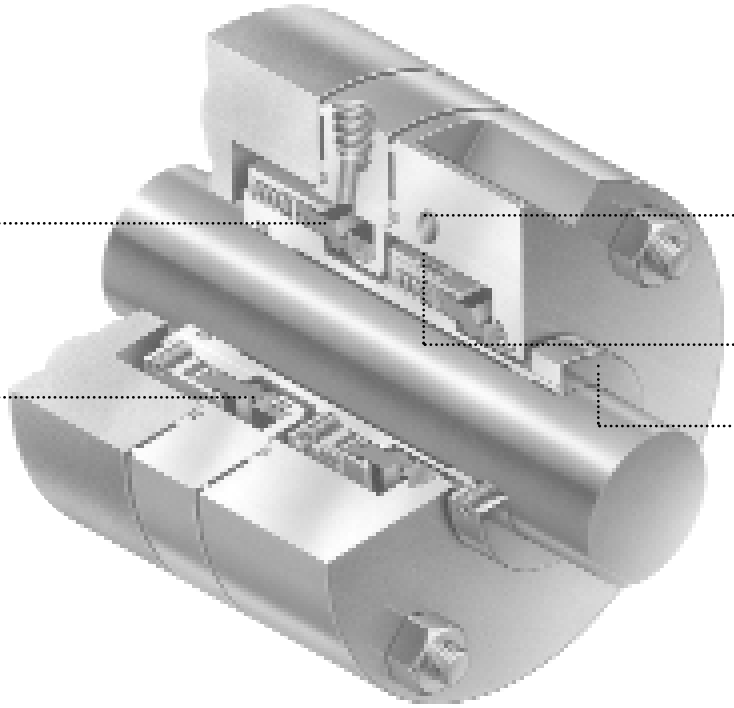

Type 3648 Dual Pressurized Seal

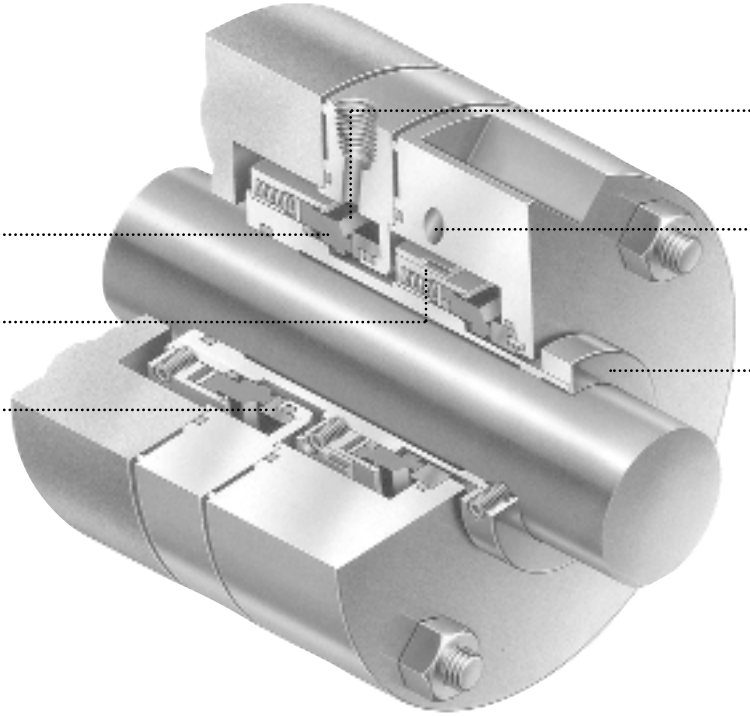

API 682 Test Qualification

All arrangements of John Crane's API 682 Type A seals have been qualification tested on propane in accordance with API 682 for flashing hydrocarbon services. Additionally the Type 1648 has been qualification tested on water, qualifying it for non-hydrocarbon services. As required, the test includes a minimum of a 100 hour steady state, 4 hour static, and cyclic portion. During the cyclic portion, the process liquid is flashed to vapor a minimum of 5 times. Further, a 50 mm/2 inch and 100 mm/4 inch seal of each arrangement is tested.

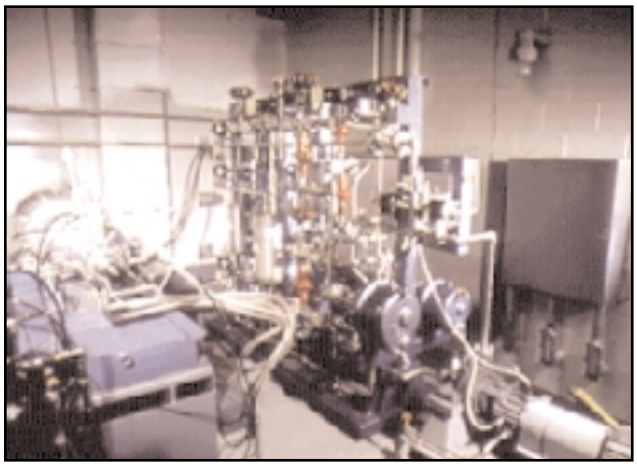

These tests are conducted in John Crane's state of the art Technology Testing Center. Emissions during the flashing hydrocarbon test are measured in accordance with EPA Method 21. John Crane's testing facilities include the ability to test propane, cold oil, hot oil, water, and caustic.

Staffed by knowledgeable and experienced engineers and research technicians, John Crane test facilities offer unique test cells that:

- Provide accurate test data and verify capabilities of seals and fluid control systems operating under "real world" conditions.
- Qualify seals per all testing requirements of API 682.
- Allows accurate verification testing of seal design and analytical studies for new product developments.
- Test both single seal and dual unpressurized and dual pressurized arrangements.

2" Type 1648 Single Seal Propane Dynamic Test Results

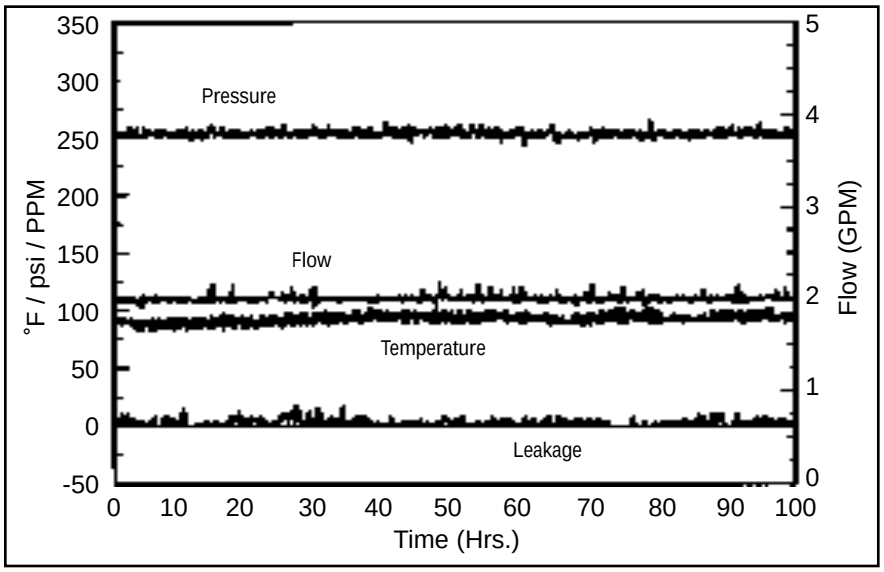

International Support

With over 110 sales and service centers strategically located around the world, John Crane offers local support and long term commitment wherever it's needed.

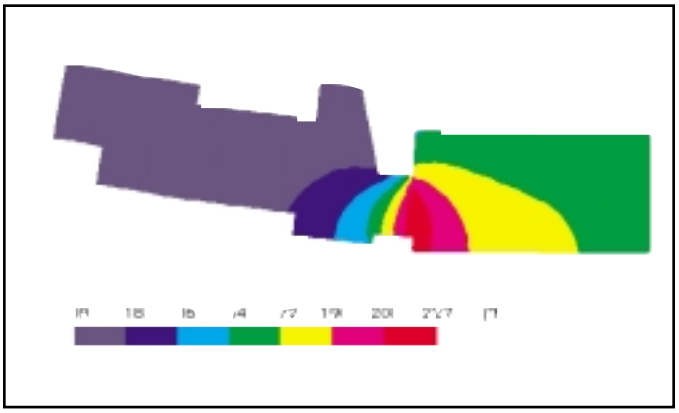

Engineering Experience

John Crane has created and continues to develop sophisticated, leading edge, computer technologies that assist with:

- Design enhancements
- Product engineering
- Predictive performance
- Finite element analysis
- Application Engineering

Our exclusive CSTEADY[SM] and CTRANS[SM] software programs analyze seal designs under steady state and transient conditions. These programs allow accurate predictive performance of a seal design before an actual field installation. John Crane's integrated computer driven Finite Element Analysis Program analyzes combined seal distortion due to pressure, temperature, stress distortion and face loadings. The information contained in these programs is based on actual field experience and in house test data on seals in a variety of operating conditions.

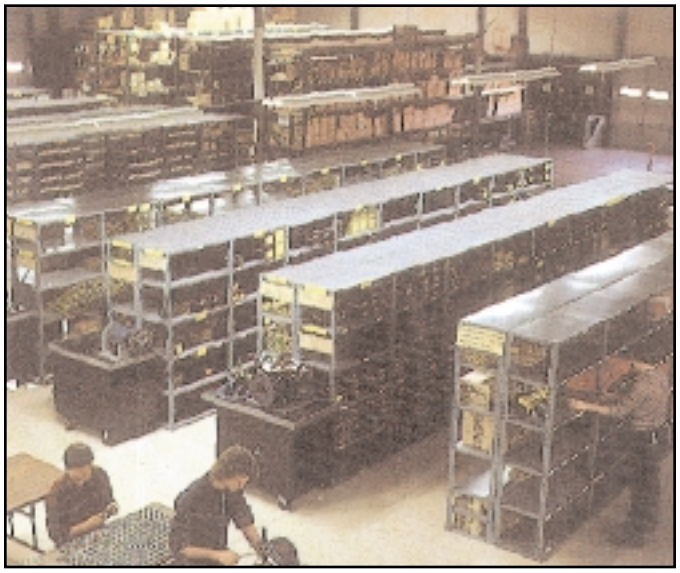

Product Availability

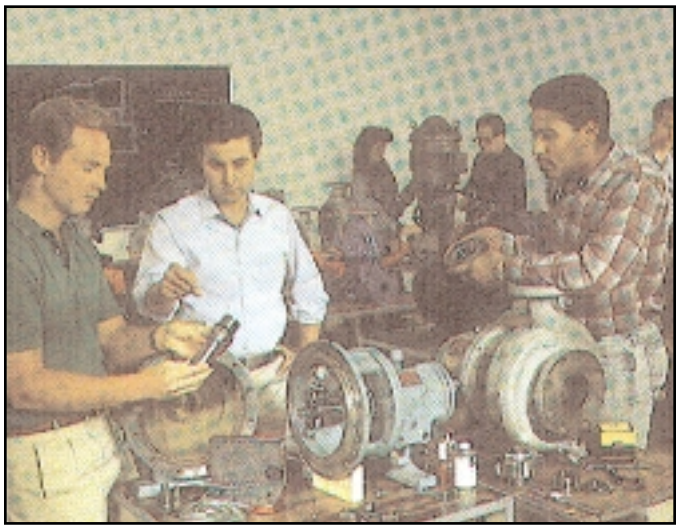

Training

John Crane International
Engineered Sealing Systems

North America
Morton Grove, Illinois USA

Tel: 847-967-2400
Fax: 847-967-3915
1-800-SEALING

Latin America
Mexico City, Mexico

Tel: 52-5-567-4511
Fax: 52-5-587-2342

Europe, Asia, Africa
Slough, UK

Tel: 44-1753-224000
Fax: 44-1753-224224

Asia Pacific
Singapore

Tel: 65-222-9161
Fax: 65-223-5035

If the products featured will be used in a potentially dangerous and/or hazardous process, your John Crane representative should be consulted prior to their selection and use. In the interest of continuous development, John Crane Companies reserve the right to alter designs and specifications without prior notice.

©1996 John Crane International Print 2/96 **ISO 9001 Certified**