Simple, Reliable Assembly and Installation

Fast • Easy • Reliable

3710 Cartridge Split Seal

U.S. Patent #5,370,401

smiths
bringing technology to life

Type 3710
Cartridge Split Seal

Technology

The Type 3710 Cartridge Split Seal is the latest innovation in the evolution of split seal designs. It utilizes John Crane's advanced split seal technology to meet today's environmental guidelines and future regulations. The unique, easy-to-install design readily adapts to horizontal and vertical pumps, mixers, and agitators. The Type 3710 is ideal for applications where reliability and minimal downtime are essential.

With over 30 years of split seal experience, from sophisticated marine propeller shaft seals to thousands of industrial pump and mixer applications, John Crane has established itself as the worldwide expert in split seal technology.

Fast & Easy Installation

The Type 3710 eliminates the need to dismantle any piece of equipment, large or small. Its fully split design can be installed in less than 30 minutes, either on the packing sleeve or directly to the shaft. The cartridge design eliminates any measuring or centering of the seal, making assembly easy, while ensuring long seal life. Available to fit metric and inch sizes, there is a Type 3710 to fit most standard equipment.

Applications

The John Crane Type 3710 Cartridge Split Seal is rugged in construction and designed for use in sealing rotating equipment in a variety of process industries such as:

- Pulp & Paper
- Waste / Wastewater
- Refinery
- Petrochemical
- Chemical
- Food Processing

Simple, Reliable Assembly and Installation

Retaining Ring
The retaining rings hold the mating ring and primary ring (insert) together during assembly. Aligning the seal face halves is no longer a concern.

Gland Assembly
Contains our unique finger spring, spring retainer, and securely bonded-in-place o-rings and gaskets.

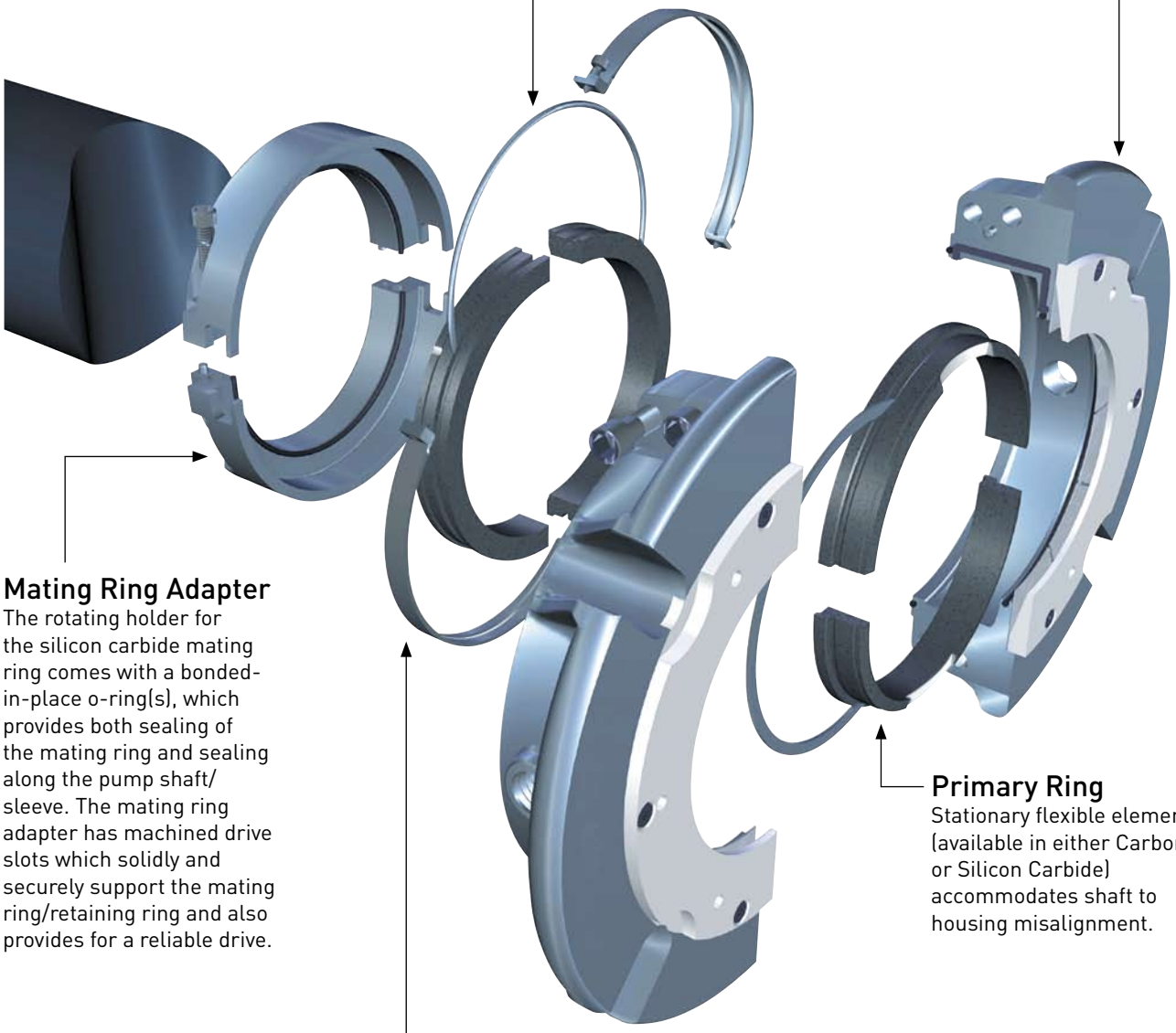

Mating Ring Adapter
The rotating holder for the silicon carbide mating ring comes with a bonded-in-place o-ring(s), which provides both sealing of the mating ring and sealing along the pump shaft/sleeve. The mating ring adapter has machined drive slots which solidly and securely support the mating ring/retaining ring and also provides for a reliable drive.

Primary Ring
Stationary flexible element (available in either Carbon or Silicon Carbide) accommodates shaft to housing misalignment.

Clamp
The clamp is used to rigidly support the mating ring halves and provides for a solid and secure installation. The clamp assembly incorporates two pre-installed screws, which do not need to be handled during installation. This clamp design also retains the seal face providing vacuum capability.

Type 3710 Adapts to Horizontal and Vertical Equipment

Mating Ring
The standard material is Silicon Carbide which is the toughest face material available and is able to handle a wide variety of applications. No chance of thermal shock commonly associated with ceramic face materials.

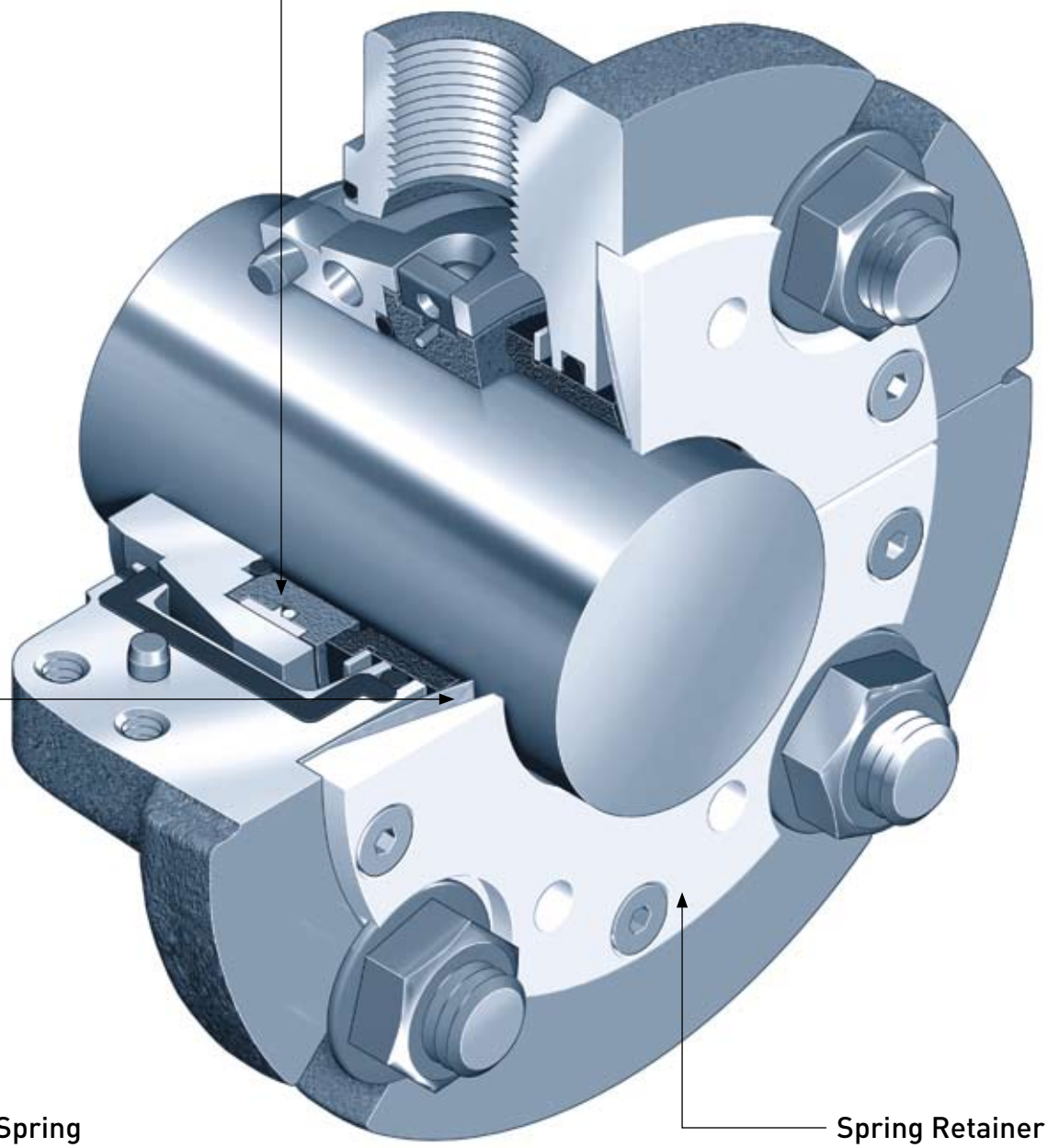

Finger Spring
The patented finger spring is designed to contact the back of the primary ring (insert) over a larger area, assuring even face loading. The finger spring eliminates clogging often associated with coil springs.

Finger Spring is U.S. Patent #5,370,401

Spring Retainer
The spring retainer retains the finger spring and functions as a centering spacer, making seal alignment fast and foolproof.

Hydraulically Pressure-Balanced Design

Performance Capabilities

Pressure	Vacuum to 14 bar g / 200 psig*
Temperatures	Up to 120°C / 250°F
Speed	3600 rpm for seal sizes up to 60mm / 2.500" 1800 rpm for seal sizes between 60mm / 2.500" and 135mm / 5.250" 900 rpm for seal sizes greater than 135mm / 5.250"

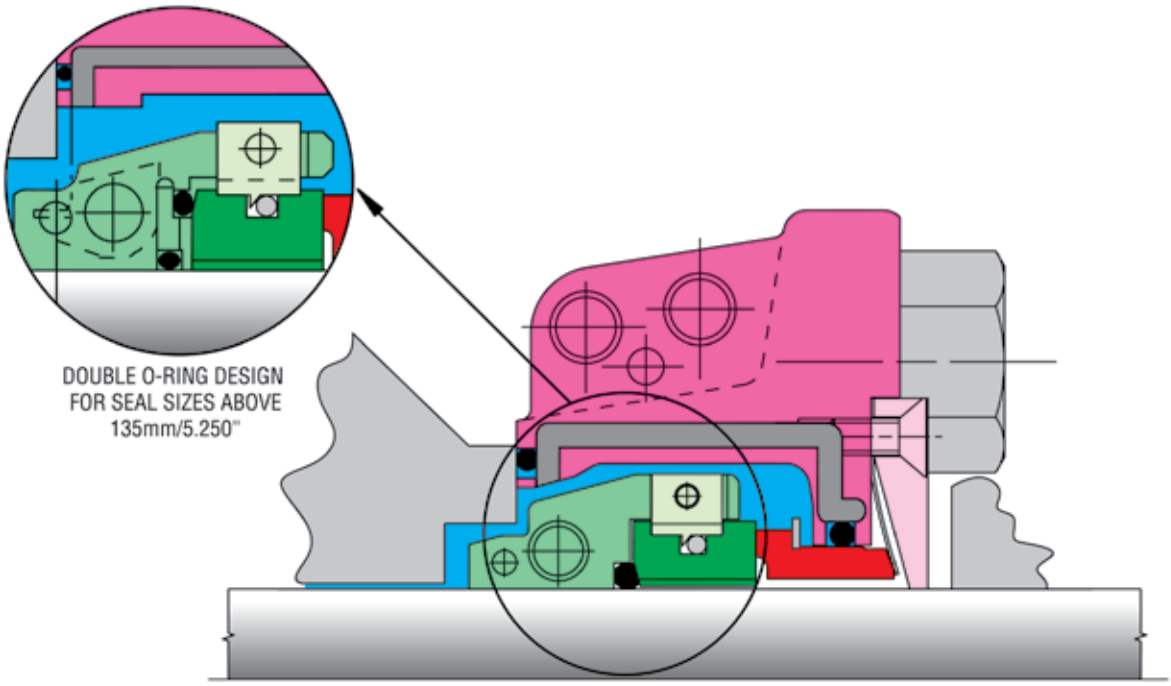

Materials of Construction

Component	Standard
Seal Faces	Carbon vs. Silicon Carbide Silicon Carbide vs. Silicon Carbide
Retaining Ring (Mating Ring)	Alloy X-750 (UNS N07750)
Retaining Ring (Primary Ring)	316 Stainless Steel (UNS 31600)
Spring Retainer	Polymer
Finger Spring	17-7 PH Stainless Steel (UNS S17700)
Elastomers	Fluorocarbon Ethylene Propylene Rubber (EPR)
Hardware	316 Stainless Steel (UNS 31600)

**Consult John Crane Engineering for Silicon Carbide vs Silicon Carbide Performance Capabilities.*

Reliable Alternative to Packing

The Type 3710 split seal will help to reduce maintenance and operating costs by providing a reliable alternative to packing.

Cost-saving advantages over packing include:

- Reduces bearing contamination from packing leakage, the leading cause of bearing failure.
- Eliminates costly sleeve/shaft replacement due to scoring damage caused by packing.
- Reduces maintenance costs by eliminating time-consuming packing adjustments.
- Energy costs are significantly reduced due to lower frictional horsepower requirements.

Features	Benefits
Advanced Seal Face Material	No chance of thermal shock commonly associated with ceramic face materials.
Patented Finger Spring	Eliminates clogging often associated with coil springs.
Hydraulically Loaded O-Ring Between the Stuffing Box and Gland	Assures a reliable seal, even when the box face is not perfect.
Pre-installed O-Rings	No loose o-rings to handle.
Seal Face Retaining Rings	Perfect for installation on vertical pumps.
Clamp Ring	Maintains seal integrity in vacuum conditions.

For your nearest John Crane facility, please contact one of the locations below.

Europe
Slough, UK
Tel: +44-1753-224000
Fax: +44-1753-224224

North America
Morton Grove, IL USA
Tel: +1-847-967-2400
Fax: +1-847-967-3915

Latin America
São Paulo, Brazil
Tel: +55-11-3371-2500
Fax: +55-11-3371-2599

Middle East & Africa`
Dubai, United Arab Emirates
Tel: +971-481-27800
Fax: +971-488-62830

Asia Pacific
Singapore
Tel: +65-6512-5200
Fax: +65-6512-5233

smiths
bringing technology to life

If the products featured will be used in a potentially dangerous and/or hazardous process, your John Crane representative should be consulted prior to their selection and use. In the interest of continuous development, John Crane Companies reserve the right to alter designs and specifications without prior notice. ISO 9001, ISO 14001 Certified. Details available on request.

©2008 John Crane Print 10/08 **www.johncrane.com** **B-3710/Eng**