Heavy Duty Cartridge Seals for Eccentric Screw Pumps

SAFEMATIC® SAS, SE2 and SAB

smiths
bringing technology to life

Engineering aspects

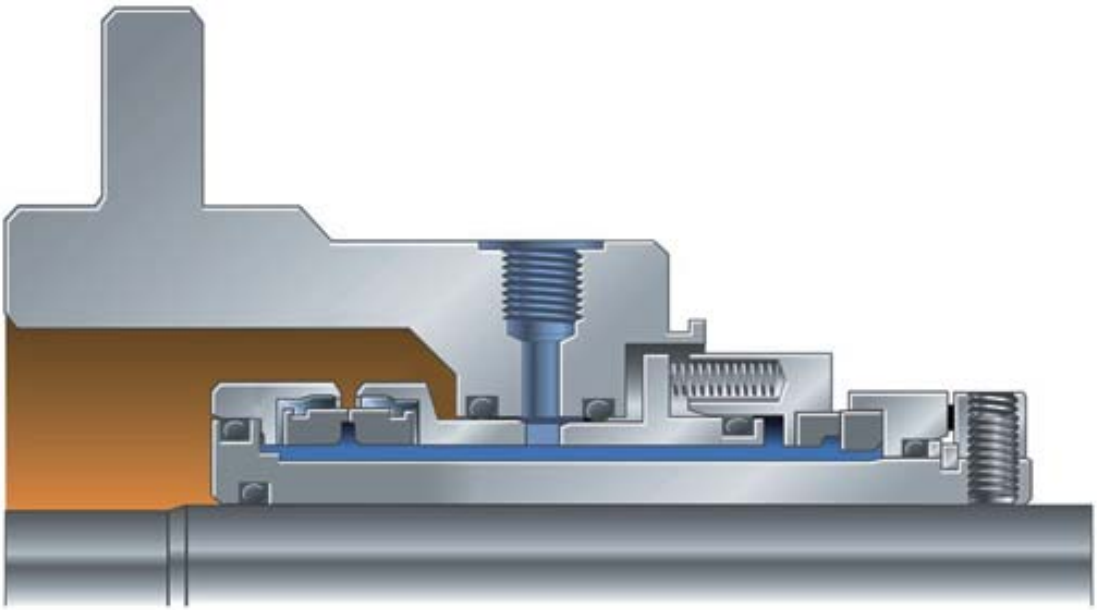

Type SE2 double-balanced dual cartridge seal

For Latex applications.

Features & Benefits

1. **Cartridge design**
   - no fitting parts needed
   - easy to install
   - no measuring required
   - self-centering

2. **Open seal area**
   - no product build-up in seal area
   - no seal hung-up

3. **Pumped product is outside seal faces**
   - centrifugal forces help moving solids content away from seal faces

4. **Only one set of non-rotating springs are used**
   - no spring pulsation

5. **Springs are isolated from the process**
   - no clogging and corrosion

6. **Elastically mounted seal faces especially for latex services**
   - self-aligning design
   - rubber booth seal face attachment
   - special shaped seal face geometry

7. **Balanced design**
   - pressurized or non-pressurized seal water can be used with type SE2 seal
   - pressure shocks do not open seal faces (latex service requires over-pressurized barrier liquid)

Eccentric screw pump seals

Eccentric screw pumps are used for pumping and dosing liquids with features such as high viscosity, pasty texture, tendency for froth or various demanding contents (neutral, aggressive, pure, abrasive, gaseous or fibrous) and solids.

Typical Applications

Eccentric pump applications can mainly be found in following industries and plants:

- sewage
- chemistry
- pulp and paper
- mining
- paints and varnishes
- starch factories
- waste water
- food and beverage
- sugar refineries

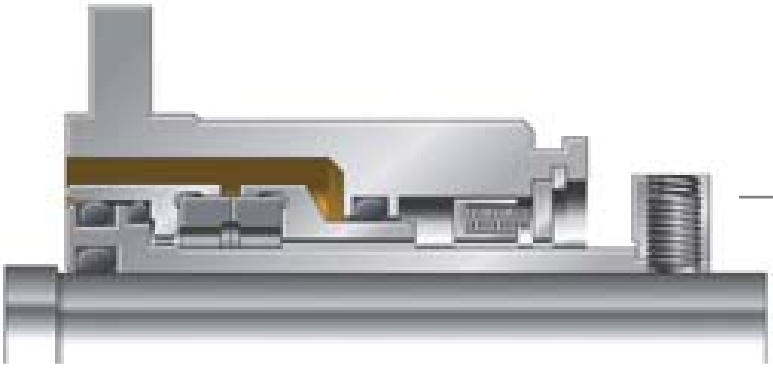

Type SAS single-acting cartridge seal

Mainly used in waste water treatment and sewage pumps. Flush optional.

Type SAB double-acting cartridge seal

Used in application where limited space is available.

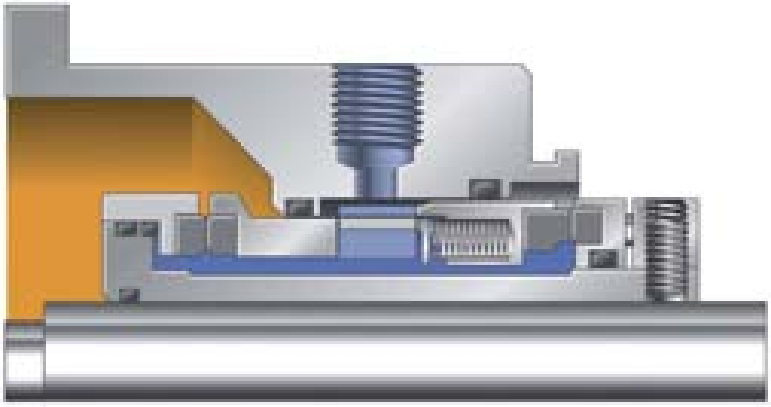

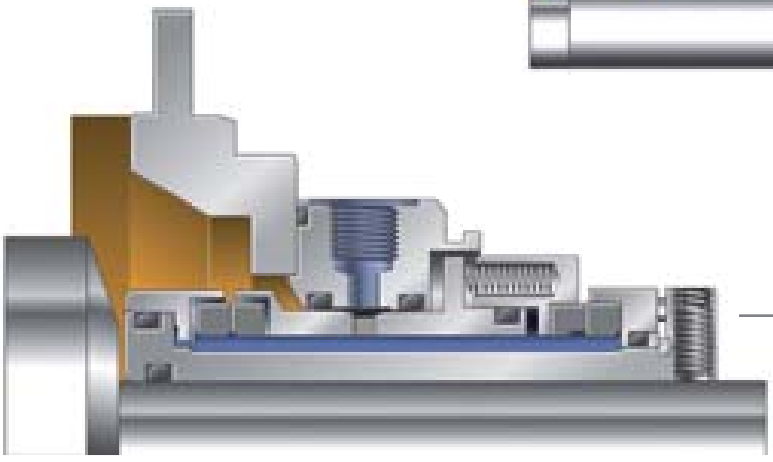

Type SE2 double-balanced dual cartridge seal

For demanding heavy duty applications where maximum performance is required.

John Crane Safematic seals are especially designed for eccentric screw pumps in close cooperation with well-known companies. This application-focused approach ensures reliable performance and extended seal life under extremely demanding conditions. John Crane Safematic seals are used in e.g. Allweiler, Netzsch-Mohno, Mono, Robbins & Meyers, Seepex and Bornemann pumps.

Typical seal support systems used with eccentric screw pumps

Safesifon

Closed seal water system normally used in critical applications where process dilution is not allowed.

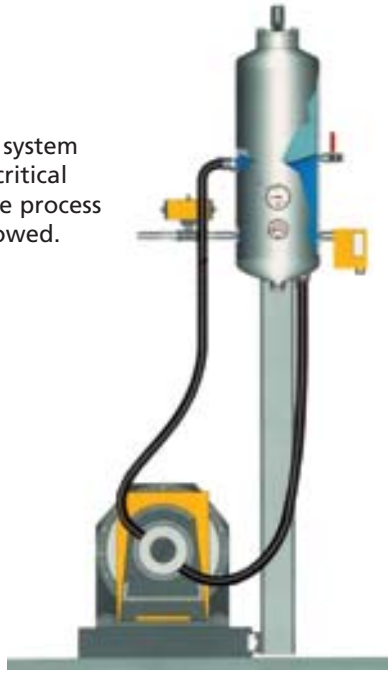

Safeunit™

Complete monitoring and control solution for seals and seal water systems.

Technical Specification

Stuffing box pressure	20 bar (290 psi) max
Seal water pressure	15 bar (215 psi) max
Velocity	20 m/s (65 ft/s) max
Temperature	180 °C (350 °F) max
Materials	
Seal faces	SiC vs. SiC (product side) SiC vs. C (atmospheric side)
O-rings	FKM against the product PTFE, EPDM, FFKM optional
Metallurgy	AISI 316/329 as standard
Springs	Nimonic steel

Seal Identification Codes

E.g. **SE2-75-QRVG-304779**

XXX-XX-$X_1X_2X_3X_4$-XXXXXX

① ② ③ ④

① Type of seal
- SAS: single seal
- SAB: double seal
- SE2: dual seal

② Shaft diameter: (mm, in)

③ Material codes

X_1	X_2	X_3	X_4
Q-SiC/SiC	R-AISI 316/329	M-PTFE	O-single seal
G-SiC/carbon	T-titanium	E-EPDM	N-TC/Carbon
T-TC/TC	U-UHB 904 L	V-FKM	G- SiC/Carbon

④ Drawing number

Europe
Slough, UK
Tel: 44-1753-224000
Fax: 44-1753-224224

North America
Morton Grove
Tel: 1-713-944-6690
Fax: 1-713-946-8252

Latin America
São Paulo, Brazil
Tel: 55-11-3371-2500
Fax: 55-11-3371-2599

Middle East & Africa
Dubai, United Arab Emirates
Tel: 971-4-3438940
Fax: 971-4-3438970

Asia
Singapore
Tel: 65-6512-5200
Fax: 65-6512-5233

For your nearest John Crane facility, please contact one of the locations above.

If the products featured will be used in a potentially dangerous and/or hazardous process, your John Crane representative should be consulted prior to their selection and use. In the interest of continuous development, John Crane Companies reserve the right to alter designs and specifications without prior notice.

©2006 John Crane Print 10/06 **www.johncrane.com** ISO 9001, ISO 14001, ISO/TS 16949 Certified. Details available on request. S-**CPKT/Eng**

smiths
bringing technology to life