L Series

METASTREAM™ Membrane Couplings

A – Stainless Steel Flexible Membranes

B – Overload & Anti-fly Protection Collars

C – Anti-Corrosion Treatment

D – Membrane Unit Assembly for Ease of Fitting

E – Fitted Bolts for Balance Integrity

F – Scalloped hubs to maximise bore

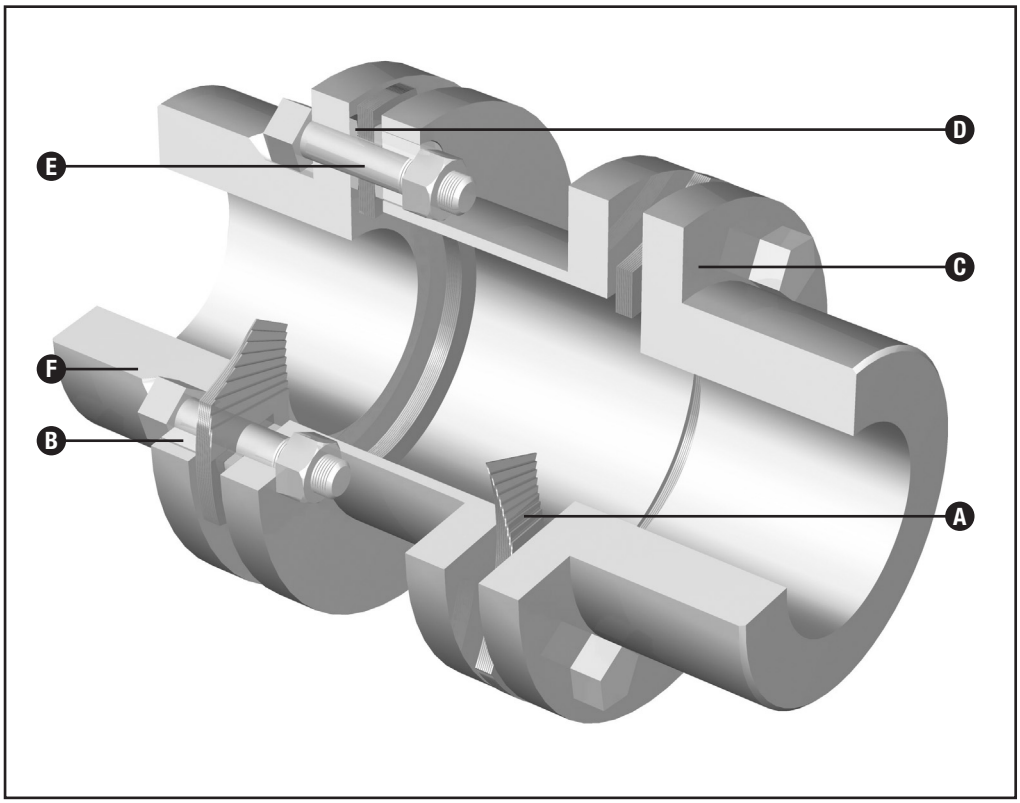

Product Description

The Metastream™ L Series range of membrane couplings has been specifically designed to provide a cost effective solution for demanding industrial applications. The couplings are selected by their torque capacity, with the scalloped hub providing the right size for the shaft.

- Easy to install
- Operates in either direction
- Hubs supplied either finish machined or solid
- Coated carbon steel hardware for corrosion protection
- Choice of hub configuration to suit the shaft diameter
- Complies with ATEX 95 for use in hazardous environments on Group II Category 2 Equipment

Design Features

- Fit and Forget: The L series coupling is designed for infinite life, and with correct machinery alignment often outlasting the machines it is connected to
- Overload Protection: The coupling is fitted with overload collars to protect the membranes in the event of severe torsional overload
- Low Imposed Loads: The membranes have been designed to optimise their torque capability, whilst minimising the reaction forces due to misalignment so reducing machinery vibration and maximising bearing life
- Zero Maintenance: The coupling has no relative moving parts, and hence requires no lubrication or maintenance
- No Backlash: The coupling design, with fitted bolts, and torsionally stiff membranes ensures that there is zero backlash. This makes the coupling ideal for drives such as machine tool indexers, printing processes, packaging, and all applications where constant speed without fluctuations is crucial

L Series

METASTREAM™ Membrane Couplings

Technical Data (Metric)

Coupling Size	Rating kW/1000 rpm	Max. Continuous Torque kNm	Peak Overload Torque kNm	Max. Unbalanced Speed rpm	Max. Balanced Speed rpm	Weight Coupling Kg Min. Std. DBSE Kg	Weight Coupling Kg Extra DBSE Kg/m	Weight Unbored Hub Kg
0007	7	0.07	0.14	7,000	22,000	1.82	7.14	0.42
0014	14	0.13	0.26	6,500	20,000	2.00	2.31	0.66
0028	28	0.27	0.55	6,000	18,000	3.90	4.80	1.35
0045	45	0.43	0.90	6,000	18,000	4.40	4.80	1.58
0090	90	0.86	1.70	5,200	15,000	8.6	7.00	3.17
0175	175	1.65	3.30	4,800	12,300	15.0	11.3	5.50
0265	265	2.50	5.00	4,400	10,800	25.2	14.2	9.60
0525	525	5.00	10.0	4,200	9,000	39.7	24.8	14.7
0810	810	7.70	15.5	4,000	7,800	55.8	34.3	20.6
1150	1,150	11.0	22.0	3,800	7,000	77.0	44.0	29.0
1560	1,560	15.0	30.0	3,700	6,000	106	54.0	39.0
1850	1,850	17.6	35.0	2,500	5,500	104	45.0	36.0
3000	3,000	28.6	57.0	2,250	5,200	165	62.0	60.0
4200	4,200	40.0	80.0	2,100	4,700	235	71.0	87.0
6000	6,000	57.0	115	2,000	4,200	342	95.0	121
9000	9,000	86.0	170	1,750	3,600	515	149	187
9012	12,000	115	230	1,600	3,200	675	183	245
9015	15,000	140	280	1,500	3,000	840	225	318
9025	25,000	235	470	1,400	2,600	1,430	230	555

Typical Arrangement

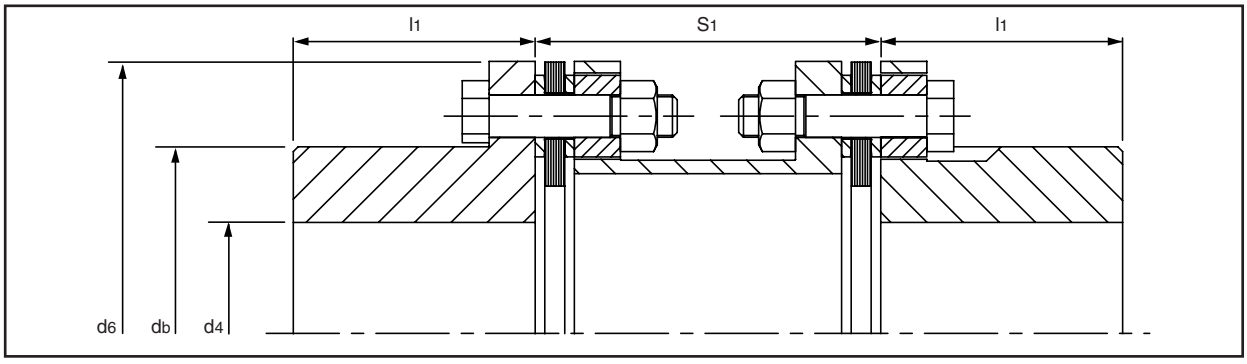

Metric Dimensional Data (mm)

Coupling Size	d_6 mm	d_b mm	d_4 mm	l_1 mm	Absolute Min (mm)	Preferred Min (mm)	Standard DBSE mm S_1* (Min)	100	140	180
0007	63	41	30	33	40	40	*	*	*	
0014	74	49	35	38	40	50	*	*	*	*
0028	95	67	48	42	43	65	*	*	*	*
0045	95	66	47	52	43	65	*	*	*	*
0090	120	86	62	62	54	75	*	*	*	*
0175	145	103	74	75	64	100	*	*	*	*
0265	172	125	90	90	74	100		*	*	*
0525	197	143	103	105	85	140			*	*
0810	222	161	115	116	97	140			*	*
1150	247	180	129	130	107	140			*	*
1560	272	198	142	145	121	180				*
1850	292	192	137	137	139	180				
3000	341	229	163	163	155	180				
4200	384	260	185	186	170	180				
6000	429	289	206	206	197	250				
9000	486	336	240	240	218	250				
9012	535	367	262	262	238	250				
9015	571	403	287	288	248	250				
9025	683	486	347	347	276	300				

Dimensions should not be used for construction. Certified dimensions furnished upon request.
* These Distance Between Shaft End (DBSE) sizes are more readily available. Other lengths to suit specific shaft separations are available.
Maximum bore d4 are based on standard DIN/BS rectangular keys. See standard Bore & Key Option for hubs normally held in stock

CUT LINE FOR SHORT PAGE

L Series

METASTREAM™ Membrane Couplings

Technical Data (Imperial)

Coupling Size	Rating HP/100 rpm	Max. Continuous Torque lb.in.	Peak Overload Torque lb.in.	Max. Unbalanced Speed rpm	Max. Balanced Speed rpm	Weight Coupling Min. Std. DBSE lb.	Weight Coupling Extra DBSE lb./in.	Weight Unbored Hub lb.
0007	0.9	620	1,239	7,000	22,000	1.82	0.11	0.93
0014	1.9	1,150	2,301	6,500	20,000	2.00	0.13	1.45
0028	3.7	2,390	4,868	6,000	18,000	3.90	0.27	2.98
0045	6.0	3,806	7,965	6,000	18,000	4.40	0.27	3.48
0090	12	7,611	15,045	5,200	15,000	8.6	0.39	6.99
0175	23	14,602	29,205	4,800	12,300	15.0	0.63	12.1
0265	35	22,125	44,250	4,400	10,800	25.2	0.79	21.2
0525	70	44,250	88,500	4,200	9,000	39.7	1.4	32.4.
0810	109	68,145	137,175	4,000	7,800	55.8	1.9	45.4
1150	154	97,350	194,700	3,800	7,000	77.0	2.5	63.9
1560	209	132,750	26,550	3,700	6,000	106	3.0	86.0
1850	248	155,760	309,750	2,500	5,500	104	2.5	79.4
3000	402	253,110	504,450	2,250	5,200	165	3.5	132
4200	563	354,000	708,000	2,100	4,700	235	4.0	192
6000	805	504,450	1,017,750	2,000	4,200	342	5.3	267
9000	1,207	761,100	1,504,550	1,750	3,600	515	8.3	412
9012	1,609	1,017,750	2,035,500	1,600	3,200	675	10.2	540
9015	2,012	1,239,000	2,478,000	1,500	3,000	840	12.6	701
9025	3,353	2,079,750	4,159,500	1,400	2,600	1,430	12.9	1,224

Typical Arrangement

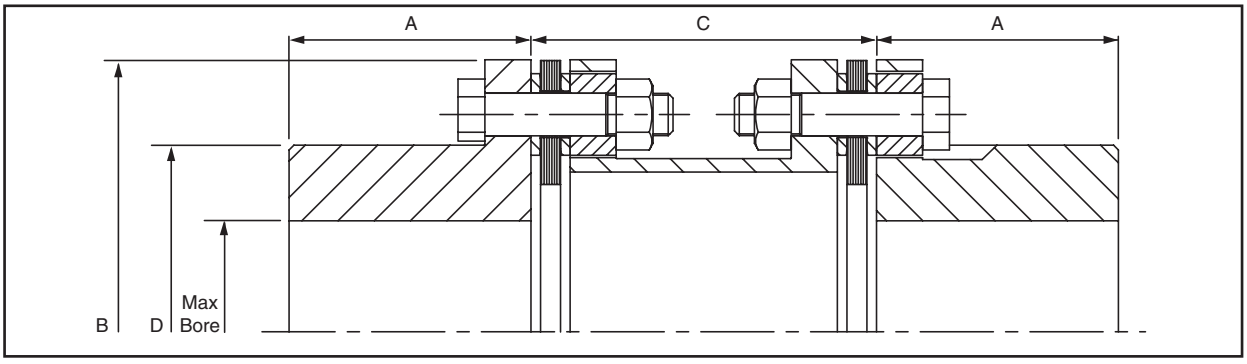

Imperial Dimensional Data (inches)

Coupling Size	Max Bore*	A	B	Standard DBSE C inches** Min (inch)	3.50	4.38	5.00	7.00	9.00	D
0007	1.188	1.30	2.44	1.57	*	*	*			1.61
0014	1.312	1.50	2.91	1.57	*	*	*			1.89
0028	1.813	1.65	3.74	1.69	*	*	*	*		2.64
0045	1.750	2.05	3.74	1.69	*	*	*	*		2.60
0090	2.250	2.44	4.72	2.13	*	*	*	*		3.38
0175	2.750	2.95	5.71	2.52			*	*		4.05
0265	3.375	3.54	6.77	2.91			*	*		4.92
0525	3.688	4.13	7.75	3.35				*	*	5.63
0810	3.938	4.57	8.74	3.82				*	*	6.34
1150	4.500	5.12	9.72	4.21				*	*	7.09
1560	4.813	5.71	10.71	4.76					*	7.79
1850	4.500	5.39	11.50	7.09					*	7.56
3000	5.500	6.42	13.43	7.09					*	9.02
4200	6.313	7.32	15.11	7.09						10.24
6000	6.750	8.11	16.89	7.87						11.38
9000	8.188	9.45	19.13	7.87						13.23
9012	8.938	10.31	21.06	9.84						14.45
9015	9.938	11.34	22.48	9.84						15.87
9025	12.250	13.66	26.89	11.81						19.13

Dimensions should not be used for construction. Certified dimensions furnished upon request.

* Maximum bore shown are based on standard ANSI/AGMA square key dimensions for size 0007 through 3000 and rectangular key dimensions for size 4206 through 9025. ** These Distance Between Shaft End (DBSE) sizes are more readily available. Other lengths to suit specific shaft separations are available.

CUT LINE FOR SHORT PAGE

L Series

METASTREAM™ Membrane Couplings

Selection Procedure (Metric)

1. Select appropriate load factor from table SF_1.
2. Select appropriate service factor from table SF_2.
3. Calculate coupling torque T_N from

$$T_N = \frac{P_N \times 9.55 \times SF_2}{n}$$

Where:
P_N = rated power for driven equipment (kW)
n = speed (rpm).

4. Select a coupling with the same or higher rating.
5. Check the hub bore capacity is suitable, if not select a larger size coupling.
6. Check peak torque capability is suitable for application.
7. Check speed capability.
8. Check whether additional dynamic balancing is required.
9. Specify Distance Between Shaft Ends (DBSE).

Example:

185 kW electric motor to a 160 kW to a paper mill calender at 1450 rpm.

SF_1 = H SF_2 = 2.00

$$T_N = \frac{185 \times 9.55 \times 2.00}{1450}$$

T_N = 2.45 kNm

Selection: LSES - 0265

Maximum bore capacity: 90 mm.

Coupling is capable of operating up to 4400 rpm.

Additional dynamic balancing is not required.

Selection Procedure (Imperial)

1. Select appropriate load factor from table SF_1.
2. Select appropriate service factor from table SF_2.
3. Calculate coupling torque T_N from

$$R = \frac{HP \times 100 \times SF_2}{N}$$

Where:
HP = rated power for driven equipment (HP)
N = speed (rpm).

4. Select a coupling with the same or higher rating.
5. Check the hub bore capacity is suitable, if not select a larger size coupling.
6. Check peak torque capability is suitable for application.
7. Check speed capability.
8. Check whether additional dynamic balancing is required.
9. Specify Distance Between Shaft Ends (DBSE).

Example:

250 HP electric motor to a paper mill calender at 1800 rpm.

SF_1 = H SF_2 = 2.00

$$R = \frac{250 \times 100 \times 2.00}{1800}$$

R = 27.8 HP per 100 rpm

Selection: LSES - 0265

Maximum bore capacity: 3.375 inches.

Coupling is capable of operating up to 4400 rpm.

Additional dynamic balancing is not required.

L Series

METASTREAM™ Membrane Couplings

Service Factor SF2

PRIME MOVER	LOAD FACTOR FOR DRIVEN MACHINE U	A	H
Electric, Hydraulic Motors & Turbines	1.00	1.50	2.00
Piston Engines: 4 cylinders & above	1.50	1.75	2.50
Piston Engines: 1 - 3 cylinders	1.75	2.25	3.00

Load Factor SF1

AGITATORS	
Pure Liquids	U
Liquids & Solids	A
Liquids - variable density	A
BLOWERS	
Centrifugal	U
Lobe	A
Vane	U
CLAY & STONE WORKING MACHINERY	H
COMPRESSORS	
Centrifugal	U
Lobe	A
Reciprocating - Multi-Cylinder	H
CONVEYORS	
Light Duty Uniformly Fed	
Apron, Bucket, Chain, Flight, Screw	U
Belt	U
Oven	A
CONVEYORS	
Heavy Duty Not Uniformly Fed	
Apron, Bucket, Chain, Flight, Oven	A
Belt	U
Reciprocating, Shaker	H
CRANES AND HOISTS (Note 1)	
Main Hoists, Reversing	H
Skip Hoists, Trolley & Bridge Drives	A
Slope	A
CRUSHERS	
Ore Stone	H
ELEVATORS (Note 1)	
Bucket	A
Centrifugal & Gravity Discharge	U
Escalators	U
Freight	H
FANS	
Centrifugal	U
Cooling Towers	A
Forced Draft	A
Induced Draft without Damper Control	H
FEEDERS	
Apron, Belt, Disc, Screw	U
Reciprocating	H
HAMMER MILLS	A
LUMBER INDUSTRY	
Barkers - Drum Type	H
Edger Feed	H
Live Rolls	H
Log Haul - Incline	H
Log Haul - Well Type	H
Off Bearing Rolls	H
Planer Feed Chains	A
Planer Floor Chains	A
Planer Tilting Hoist	A
Slab Conveyor	U
Sorting Table	U
Trimmer Feed	A
METAL MILLS	
Draw Bench - Carriage	H
Draw Bench - Main Drive	H
Forming Machines	H
Slitters	A
Table Conveyors	
Non - Reversing	H
Reversing	H
Wire Drawing & Flattening Machine	A
Wire Winding Machine	A
METAL ROLLING MILLS	
Coilers, Hot Mill	A
Coilers, Cold Mill	U
Cold Mills	A
Cooling Beds	A
Door Openers	A
Draw Benches	A
Edger Drives	A
Feed Rolls, Reversing Mills	H
Furnace Pushers	A
Hot Mills	H
Ingot Cars	A
Kick-outs	A
Manipulators	H
Merchant Mills	H
Pusher Rams	A
Reel Drives	A
Reel Drums	A
Reelers	H
Rod & Bar Mills	H
Roughing Mill Delivery Table	H
Runout Tables	A
Saws, Hot & Cold	A
Screwdown Drives	H
Slitters	H
Slab Mills	H
Soaking Pit Cover Drives	H
Straighteners	A
Tables, Transfer & Runout	A
Thrust Block	H
Traction Drive	H
Tube Conveyor Rolls	A
Wire Drawing	A
MILLS, ROTARY TYPE	
Ball	H
Dryers & Coolers	H
Hammer	H
Kilns	H
Pebble & Rod	H
Pug	H
Tumbling Barrels	H
MIXERS	
Concrete	A
Drum Type	A
PAPER MILLS	
Barker, Auxiliaries, Hydraulic	H
Barker, Mechanical	H
Barking Drum Spur Gear Only	H
Beater & Pulper	A
Bleacher	U
Calenders	H
Chippers	A
Coaters	U
Couch Roll	A
Cutter, Platers	H
Cylinders	A
Disc Refiners	A
Dryers	A
Felt Stretcher	U
Felt Whipper	H
Line Shaft	U
Log Haul	H
Pulp Grinder	A
Press Roll	H
Reel	A
Stock Chests	A
Suction Roll	A
Washers & Thickeners	A
Winders	A
PUMPS	
Centrifugal	U
Reciprocating Single Acting	
1 or 2 Cylinders	H
Double Acting	H
Rotary, Gear, Lobe, Vane	A
RUBBER INDUSTRY	
Mixed - Banbury	H
Rubber Calendar	H
Rubber Mill (2 or more)	H
Sheeter	H
Tyre Building Machines	H
Tyre & Tube Press Openers	U
Tubers & Strainers	H
SEWAGE DISPOSAL EQUIPMENT	
Bar Screens	U
Chemical Feeders	U
Dewatering Screens	U
Grit Collectors	U
Scum Breakers	U
Slow or Rapid Mixers	U
Sludge Collectors	U
Thickeners	U
Vacuum Filters	U

Note 1 : Consult Local Safety Codes

L Series

METASTREAM™ Membrane Couplings

Available Options

Spark resistant

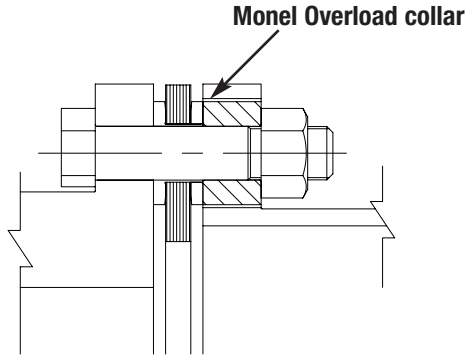

Electrically insulated

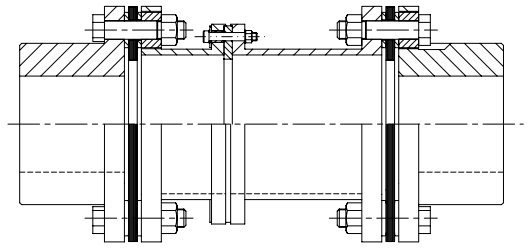

Flanged (Standard SAE)

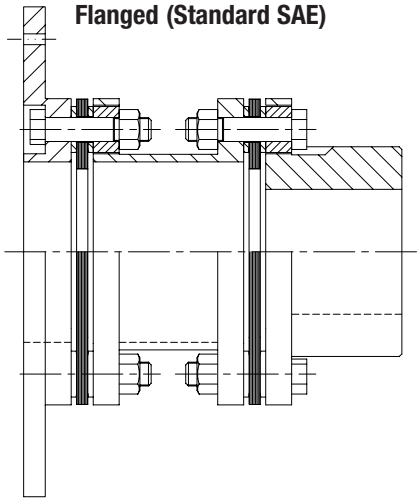

Torque limiting

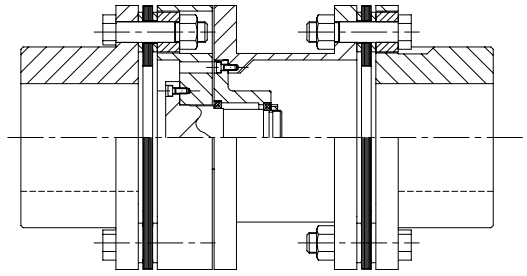

Vertical supported from lower shaft

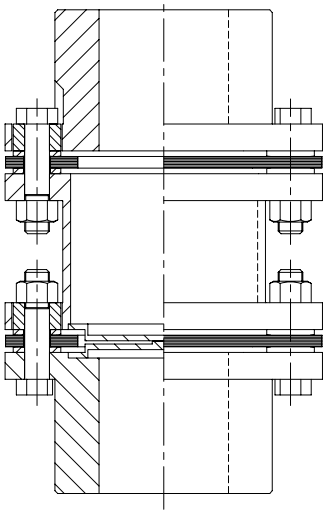

Non Spacer

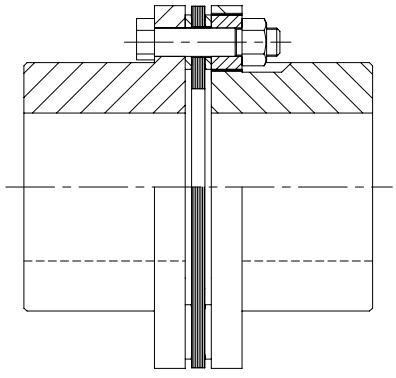

CUT LINE FOR SHORT PAGE

L Series

METASTREAM™ Membrane Couplings

Close coupled with 2 reverse hubs L*EC

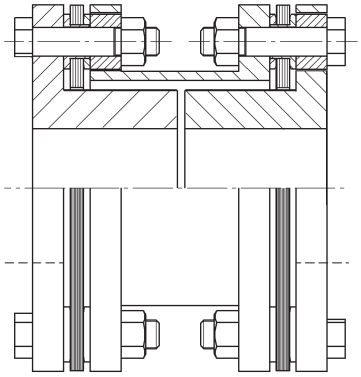

Short DBSE with 1 Reverse Hub L*EH

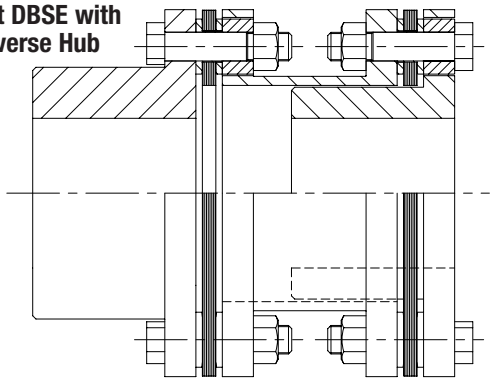

Long DBSE Steel (Carden shaft)

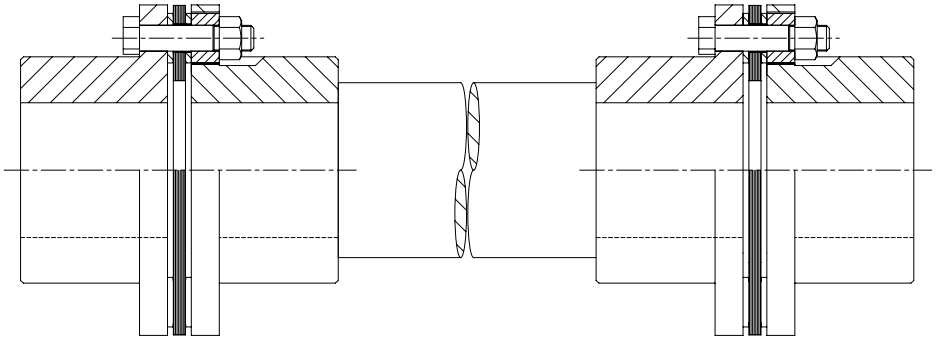

Long DBSE Steel

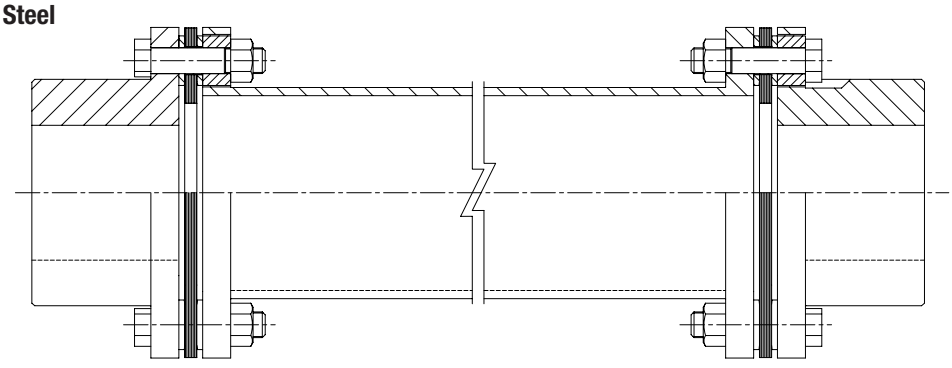

Long DBSE Composite

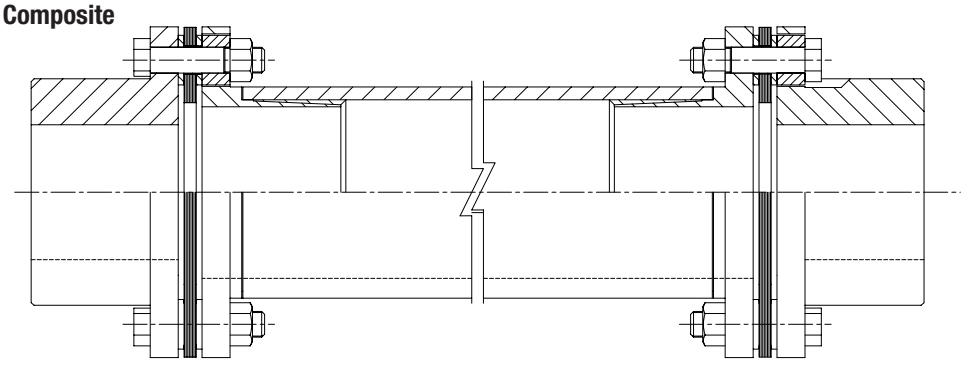

CUT LINE FOR SHORT PAGE

L Series

METASTREAM™ Membrane Couplings

Coupling Alignment

Correct installation and alignment of couplings is essential for reliable machinery performance. John Crane supplies a variety of shaft alignment equipment and offers alignment training courses.

L SERIES MISALIGNMENT CAPABILITIES			
Coupling Size	Max. Axial ± mm	Max. Angular* Degrees	Max. Parallel ** mm
0007	1.5	1.0	0.5
0014	1.5	1.0	0.7
0028	1.8	1.0	0.9
0045	1.2	0.8	0.7
0090	1.5	0.8	0.9
0175	2.0	0.8	1.2
0265	2.5	0.8	1.2
0525	2.7	0.8	1.6
0810	3.2	0.8	1.6
1150	3.7	0.8	1.6
1560	4.2	0.8	2.0
1850	3.0	0.5	1.4
3000	4.0	0.5	1.4
4200	4.4	0.5	1.4
6000	5.0	0.5	1.5
9000	6.0	0.5	1.5
9012	6.8	0.5	1.9
9015	7.5	0.5	1.9
9025	8.8	0.5	2.3

L SERIES MISALIGNMENT CAPABILITIES			
Coupling Size	Max. Axial ± inch	Max. Angular* Degrees	Max. Parallel ** inch
0007	0.059	1.0	0.020
0014	0.059	1.0	0.027
0028	0.071	1.0	0.035
0045	0.047	0.8	0.027
0090	0.059	0.8	0.035
0175	0.079	0.8	0.047
0265	0.098	0.8	0.047
0525	0.106	0.8	0.063
0810	0.126	0.8	0.063
1150	0.146	0.8	0.063
1560	0.165	0.8	0.078
1850	0.118	0.5	0.055
3000	0.157	0.5	0.055
4200	0.173	0.5	0.055
6000	0.197	0.5	0.059
9000	0.236	0.5	0.059
9012	0.268	0.5	0.075
9015	0.295	0.5	0.075
9025	0.346	0.5	0.090

These values are maximums for each type of misalignment. It is recommended that the coupling is initially aligned to 10% of these values to allow for inevitable movements during the life of the machines.

*** The values given are for each membrane bank. ** These values are based on the standard minimum distance between shaft ends. (Min).**

Standard Bore & Key Options

To assist in rapid order processing, a selection of standard bored hubs to H7 tolerance with keyways to DIN 6885 are held in stock, as listed below.

Bore Size	Coupling Size 0007	0014	0028	0045	0090	0175	0265	0525
16	X							
19	X							
20	X							
22	X	X						
24	X	X						
25	X	X						
28	X	X	X	X				
30	X	X	X	X				
32		X	X	X	X			
35		X	X	X	X			
38			X	X	X			
40			X	X	X	X		
42			X	X	X	X		

Bore Size	Coupling Size 0007	0014	0028	0045	0090	0175	0265	0525
45			X	X	X	X		
48			X		X	X	X	
50					X	X	X	
55					X	X	X	
60					X	X	X	
65						X	X	X
70						X	X	X
75						X	X	X
80							X	X
85							X	X
90							X	X
95								X
100								X

Unless otherwise specified, parallel bores will be machined to an H7 tolerance, with Js9 keyways to DIN 6885, ISO R773 or BS 46 Pt1 (inch).

Europe
Slough, UK
Tel: 44-1753-224000
Fax: 44-1753-224224

North America
Houston
Tel: 1-713-944-6690
Fax: 1-713-946-8252

Latin America
São Paulo, Brazil
Tel: 55-11-3371-2500
Fax: 55-11-3371-2599

Middle East & Africa
Dubai, United Arab Emirates
Tel: 971-4-3438940
Fax: 971-4-3438970

Asia
Singapore
Tel: 65-6512-5200
Fax: 65-6512-5233

For your nearest John Crane facility, please contact one of the locations above.

If the products featured will be used in a potentially dangerous and/or hazardous process, your John Crane representative should be consulted prior to their selection and use.
In the interest of continuous development, John Crane Companies reserve the right to alter designs and specifications without prior notice.

©2006 John Crane Print 10/06 **www.johncrane.com** ISO 9001, ISO 14001, ISO/TS 16949 Certified. Details available on request. S-**L Series/Eng**

smiths
bringing technology to life