TYPE 37FSB

Balanced Fully Split Seal

A – Primary Ring
B – Mating Ring
C – Compression Ring
D – Sealing Ring
E – Gland Plate
F – Clamp Ring
G – Drive Ring
H – Fasteners
I – Retaining Ring
J – Cord Segment

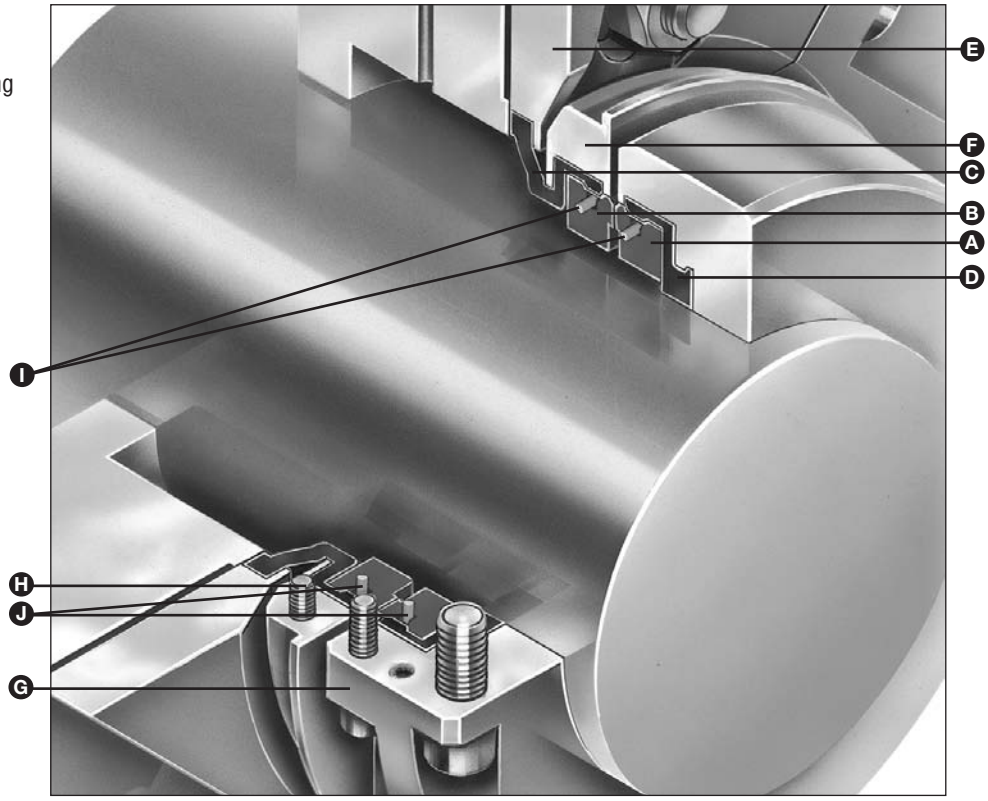

Product Description

The Type 37FSB fully split seals contribute to significantly reduced maintenance on larger, difficult-to-seal equipment. They are recommended for use on heavy duty, packed equipment that previously could not accommodate mechanical seals because of severe shaft runout and vibration, difficulty to disassemble, worn out equipment, and similar problems. Type 37FSB seals are outside mounted and can be used on vertical and horizontal applications.

- For use on large, heavy duty rotating shaft equipment such as mixers, agitators, pumps.
- For pulp and paper, power generation, food processing, wastewater treatment, mining, and other demanding industries.

Performance Capabilities

- Temperature:
  82˚C/180˚F max.
- Pressure:
  14 barg/200 psig max.
- Speed:
  1800 rpm max.

For other operating conditions, consult John Crane Engineering.

Design Features

- Maximum Flexibility — compression ring provides extreme flexibility. Shaft deflections, angular misalignments, and run outs are “tracked” by the seal without diminishing performance.
- No Springs — compression ring acts as the spring eliminating clogging problems seen in fibrous or abrasive services.
- Slotted Gland Plates — long slots on gland plates allow the seals to be fitted to numerous pumps and other rotating equipment without adaptors.
- Any Shaft Size Possible — the rotating assembly can be machined to fit any size shaft whether it is inch, metric, or special.
- No O-rings — wide sealing surface of the sealing ring prevents leaks even on the most worn, pitted shafts.
- Self-Aligning — the rotating assembly self-aligns itself square with the shaft for true running.
- Easy Installation — fewer parts and simple design allow for easy installation. Seal can be readily mounted on worn shafts and on out-of-square stuffing boxes. No modification of equipment is needed.
- Retaining ring ensures perfect face halves alignment and trouble-free startup.

TYPE 37FSB

Balanced Fully Split Seal

Type 37FSB Typical Arrangement/Dimensional Data

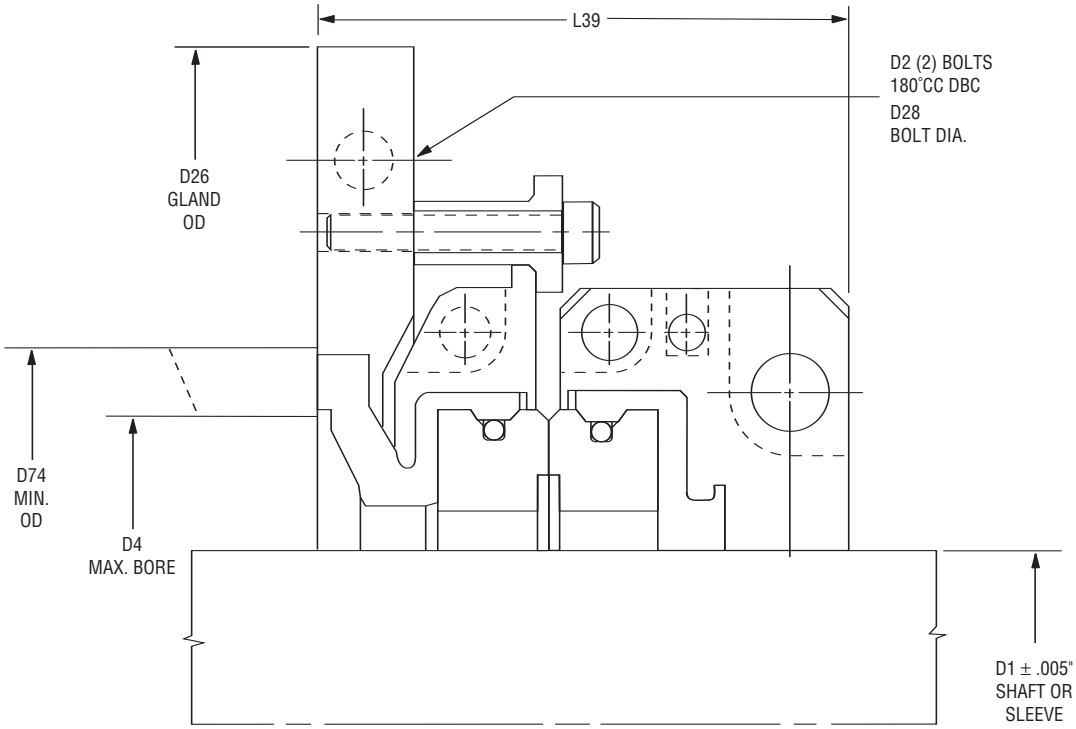

Type 37FSB Dimensional Data (inches)

Shaft/ Sleeve Size D1	D2	D4	D26	D28	D74	L39 SIC/SIC*	L39 CAR/SIC **
3.437-3.811	8.250-10.750	5.375	11.750	.750	6.182	3.42	3.48
3.812-4.186	8.625-11.125	5.750	12.125	.750	6.557	3.42	3.48
4.187-4.561	9.000-11.500	6.125	12.500	.750	6.932	3.42	3.48
4.562-4.936	9.375-11.875	6.500	12.875	.750	7.307	3.42	3.48
4.937-5.311	9.750-12.250	6.875	13.250	.750	7.682	3.42	3.48
5.312-5.686	10.125-12.625	7.250	13.625	.750	8.057	3.42	3.48
5.687-6.061	10.500-13.000	7.625	14.000	.750	8.432	3.42	3.48
6.062-6.436	10.875-13.375	8.000	14.375	1.000	8.807	3.63	3.69
6.437-6.811	11.250-13.750	8.375	14.750	1.000	9.182	3.63	3.69
6.812-7.186	11.625-14.125	8.750	15.125	1.000	9.557	3.63	3.69
7.187-7.561	12.000-14.500	9.125	15.500	1.000	9.932	3.63	3.69
7.562-7.936	12.375-14.875	9.500	15.875	1.000	10.307	3.63	3.69
7.937-8.311	12.750-15.250	9.875	16.250	1.000	10.682	3.63	3.69
8.312-8.686	13.125-15.625	10.250	16.625	1.000	11.057	3.63	3.69
8.687-9.061	13.500-16.000	10.625	17.000	1.000	11.432	3.63	3.69
9.062-9.436	13.875-16.375	11.000	17.375	1.000	11.807	3.63	3.69
9.437-9.811	14.250-16.750	11.375	17.750	1.000	12.182	3.63	3.69
9.812-10.187	14.625-17.125	11.750	18.125	1.000	12.557	3.63	3.69

* SIC/SIC = Silicon Carbide vs. Silicon Carbide

** CAR/SIC = Carbon vs. Silicon Carbide

TYPE 37FSB

Balanced Fully Split Seal

Basic Pressure Rating

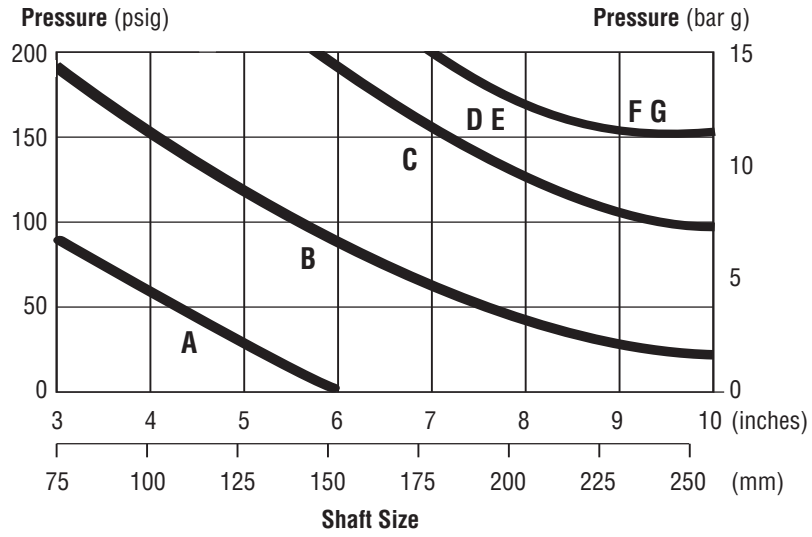

A. Silicon Carbide vs. Silicon Carbide (Similar) 1800 rpm
B. Silicon Carbide vs. Silicon Carbide (Similar) 1200 rpm
C. Silicon Carbide vs. Silicon Carbide (Similar) 800 rpm
D. Silicon Carbide vs. Silicon Carbide (Dissimilar) 1800 rpm
E. Carbon vs. Silicon Carbide 1800 rpm
F. Silicon Carbide vs. Silicon Carbide (Dissimilar) 1200 rpm
G. Carbon vs. Silicon Carbide 1200 rpm

The Basic Pressure Rating is for a standard Type 37FSB seal, as shown in the typical arrangement, when installed according to the criteria given in this data sheet and generally accepted industrial practices.

The Basic Pressure Rating assumes stable operation in a clean, cool, lubricating, nonvolatile liquid, with an adequate flush rate. For process services outside this range or a more precise assessment of the dynamic pressure rating, contact John Crane for more information.

Materials of Construction

SEAL COMPONENTS	MATERIALS	
Description	**Standard**	**Options**
Primary Ring	Carbon Silicon Carbide	—
Mating Ring	Silicon Carbide	—
Secondary Sealing Element	Buna-N Ethylene Propylene	Fluoroelastomer TFE Propylene
Cord Segment	TFE Propylene	—
Retaining Ring	Inconel®	—
Clamp Ring Drive Ring Gland Plate Fasteners	316 Stainless Steel Monel® (bolts only)	—

Inconel and Monel are registered trademarks of the Special Metals Corporation Group of Companies.

TYPE 37FSB

Balanced Fully Split Seal

Criteria for Installation

Shaft/Sleeve	Limits
Shaft Surface Finish	125-500 Ra
Ovality/Out of Roundness (Shaft)	0.13mm/0.005"
End Play/Axial Float Allowance	±0.76mm/0.030"
Axial Runout/Out of Squareness	2.54mm/0.100" TIR (Silicon Carbide vs. Silicon Carbide) 1.27mm/0.050" TIR (Carbon vs. Silicon Carbide)

CUT LINE FOR SHORT PAGE

TYPE 37FSB

Balanced Fully Split Seal

Flexibility Specifications

1. Seal chamber dimensions and finishes:

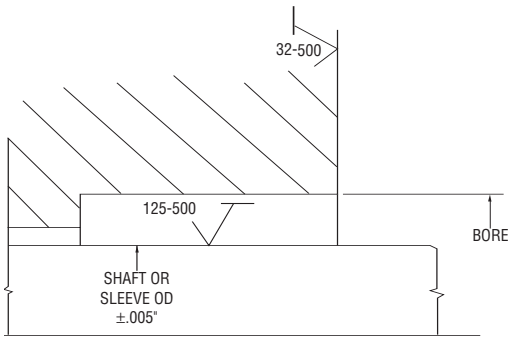

2. Axial end play
Seal sizes 3.625" to 10.000" - 0.060" TIR max.

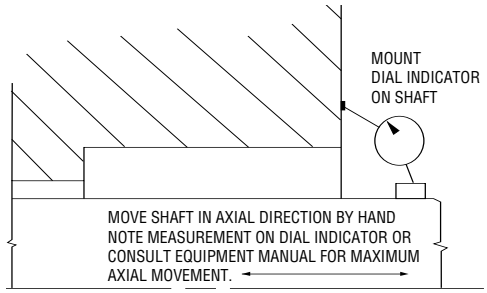

3. Squareness of seal chamber face to shaft
Carbon vs. Silicon = 0.050" TIR max.
Silicon vs. Silicon = 0.100" TIR max.

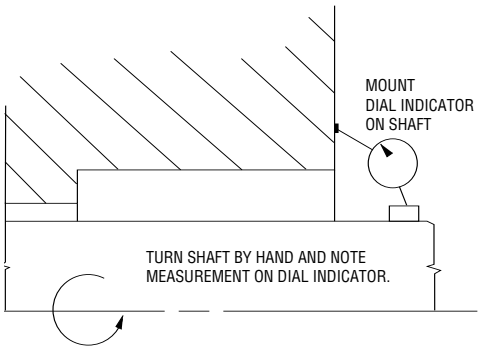

4. Shaft runout (0.020" TIR max.)

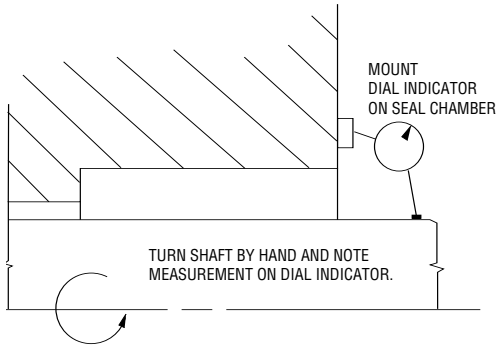

5. Stuffing box face waviness
(0.030" TIR max.)

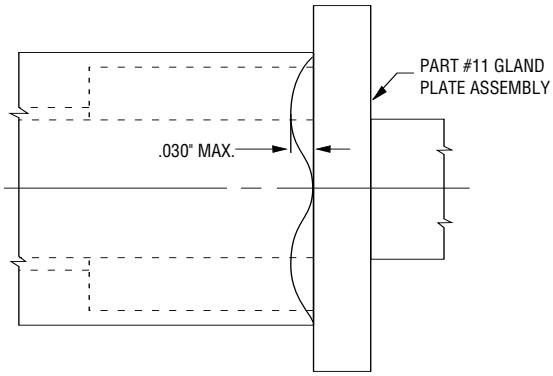

6. Radial shaft movement
(0.125" TIR max.)

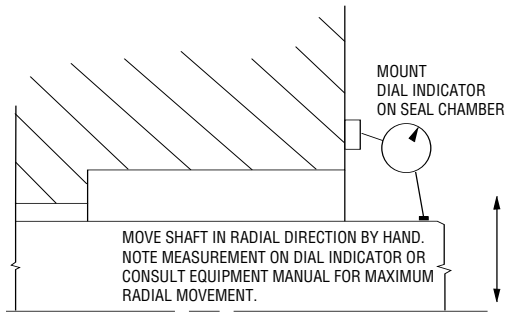

CUT LINE FOR SHORT PAGE

TYPE 37FSB

Balanced Fully Split Seal

Application Information

The Type 37FSB Seal is custom-tailored to the application required. Applications must be reviewed by John Crane Engineering. The following data is necessary to evaluate the proposed application.

Customer's Name: _____ Location: _____

John Crane Salesman: _____ Phone # _____

1. Equipment:

Type: _____ Manufacturer _____

Model: _____ Installation: Horizontal _____ Vertical: _____

If Vertical: ❏ Top Entering or ❏ Bottom Entering

2. Application:

Process Fluid: _____ Specific Gravity: _____

Viscosity: _____ Vapor Pressure: _____

Injection Fluid: _____ Available Pressure: _____

Max. Allowable Pressure: _____ Max. Allowable Flow Rate: _____

3. Operation:

Speed: _____ Temperature: _____ Stuffing Box Pressure: _____

Suction Pressure: _____ Discharge Pressure: _____

4. Dimensions:

Sleeve OD (A) (if applicable): _____

Sleeve Extension (B) (if applicable): _____

Shaft/Sleeve Surface Finish: _____

Shaft OD (C): _____

Stuffing Box Bore (D): _____

Stuffing Box OD (E): _____

Bolt Circle Diameter (F): _____

Number & Size of Bolts (G, H): _____

Type of Bolts: (Circle Appropriate):

Swing Bolts: ❏

Studs: ❏ Removable? Yes ❏ No ❏

Tapped Holes: ❏

Bolt Extension (I): _____

Nearest Obstruction (J): _____

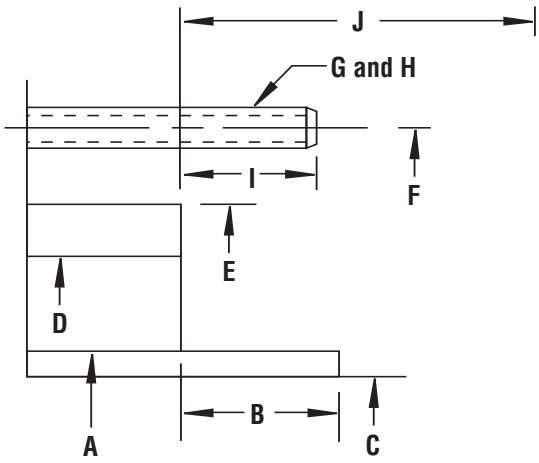

Europe
Slough, UK
Tel: 44-1753-224000
Fax: 44-1753-224224

Latin America
São Paulo, Brazil
Tel: 55-11-3371-2500
Fax: 55-11-3371-2599

Middle East, Africa, Asia
Dubai, United Arab Emirates
Tel: 971-4-3438940
Fax: 971-4-3438970

North America
Morton Grove, Illinois USA
1-800-SEALING
Tel: 1-847-967-2400
Fax: 1-847-967-3915

smiths

For your nearest John Crane facility, please contact one of the locations above.

If the products featured will be used in a potentially dangerous and/or hazardous process, your John Crane representative should be consulted prior to their selection and use. In the interest of continuous development, John Crane Companies reserve the right to alter designs and specifications without prior notice. It is dangerous to smoke while handling products made from PTFE. Old and new PTFE products must not be incinerated.

©2006 John Crane Inc. Print 6/06