TYPE 83

Separation Seal

A – Housing
B – Retainer
C – Clamp Plate
D – Bushing Segment
E – Radial Spring
F – Sleeve
G – Axial Spring

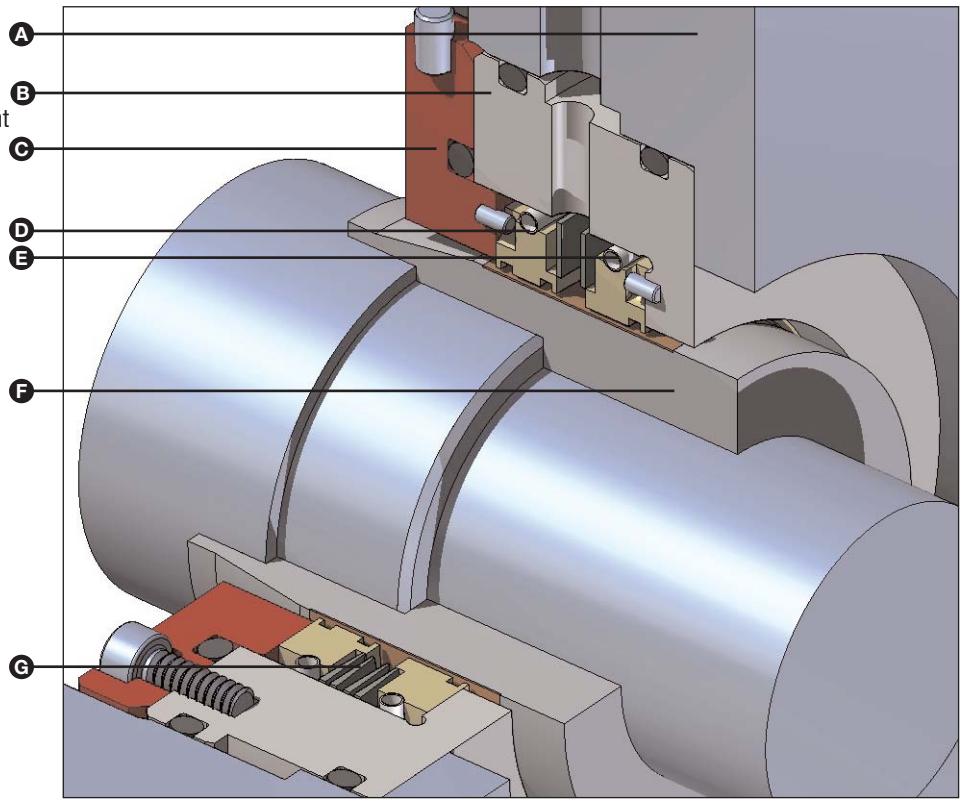

Product Description

The Type 83 is a contacting carbon bushing designed to isolate the bearing oil from the dry gas seal cartridge.

- Normally supplied as a complete seal cartridge, unique inner and outer segments are specifically designed to prevent oil migration and minimize wear
- Nitrogen is normally injected between the two segmented bushings effectively creating a pressure barrier between the bearing and DGS cavity
- Advanced materials and design ensure minimal wear and promote long life. Unlike many contacting separation seals it is designed to operate on cryogenically dry nitrogen

Design Features

- Low separation gas consumption.
- Low wear for longer life and improved reliability.
- Cartridge design for easy installation.
- Universal design independent of shaft rotation.
- Unique carbon bushing segment design with self-adjusting hydropads.
- Specially designed segment joint minimises the separation gas consumption

Performance Capabilities

- Temperature:
  -30°C to 200°C / -20°F to 400°F
- Speed:
  Up to 130 mps / 430 fps
- Operating Pressure Range:
  0.2 to 1.0 barg / 3 to 15 psig
- Normal Separation Gas Supply Pressure:
  0.3 to 0.5 bar / 5 to 7 psi
- Gases:
  Nitrogen, Air
- Vibration Levels to API617

For alternative conditions, consult John Crane Engineering.

TYPE 83

Separation Seal

Required Installation and P&ID for Type 83 Separation seal

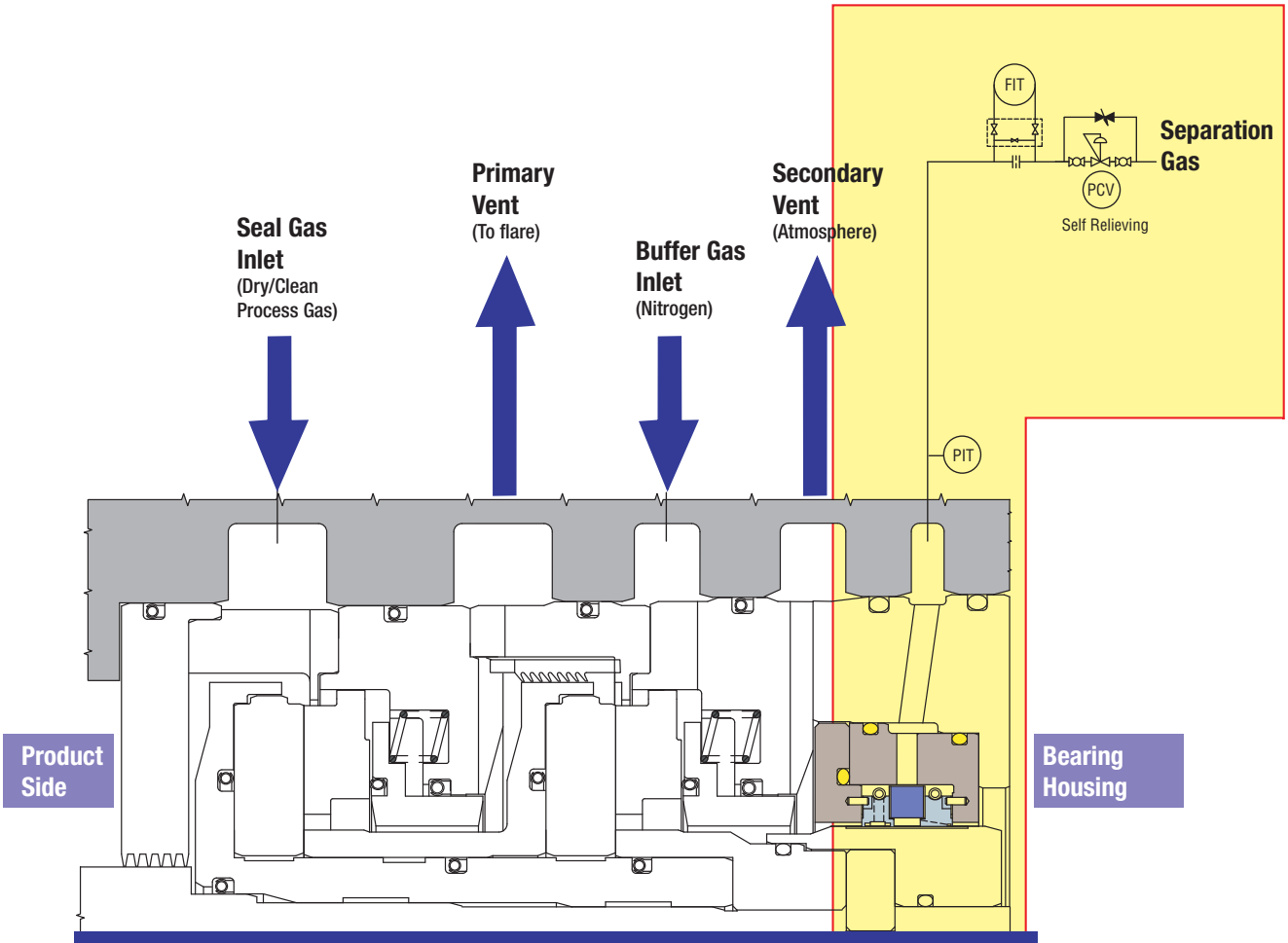

Typical arrangement with a Type 28XP Tandem Seal

TYPE 83

Separation Seal

Type 83 Leakage rates

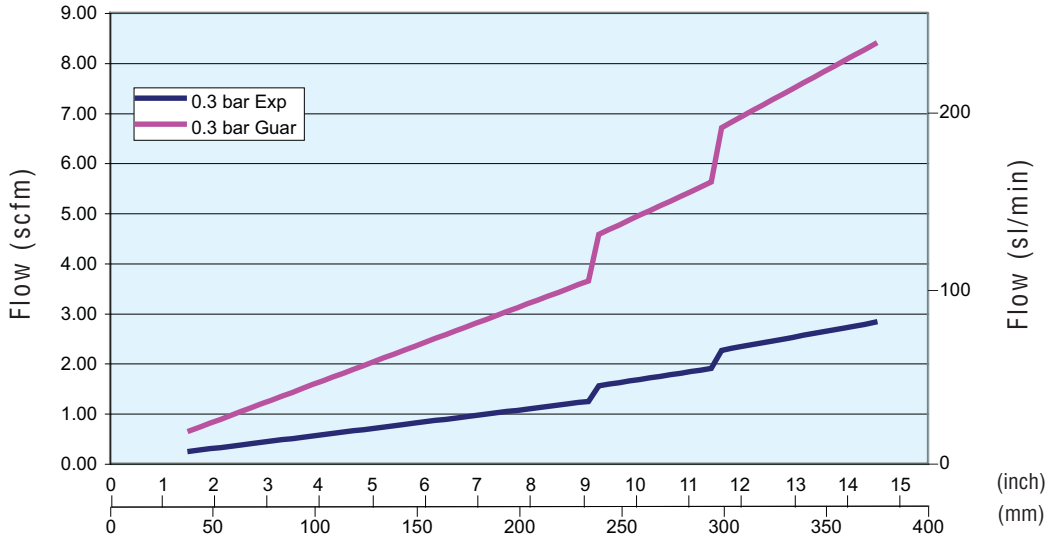

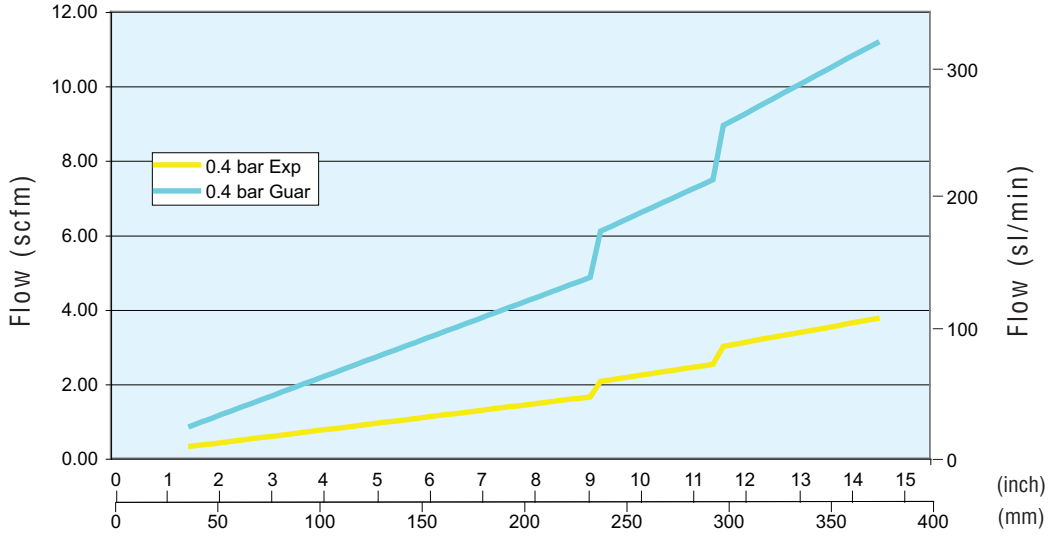

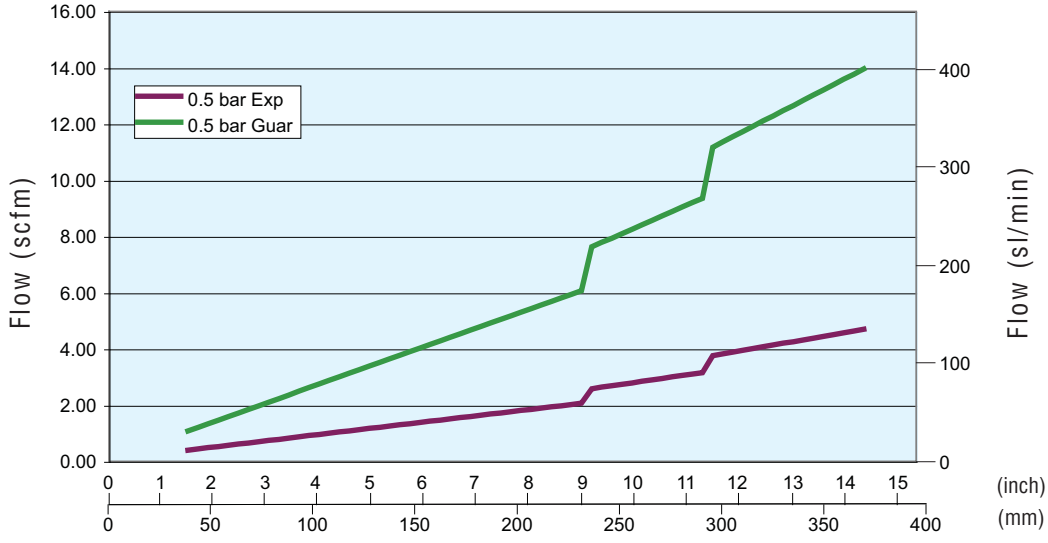

Shaft Diameter

Leakages are for a double seal cartridge as shown on page 2

TYPE 83

Separation Seal

Materials of Construction

SEAL COMPONENT DESCRIPTION	STANDARD MATERIALS
Bushing Segments	Carbon
Axial Spring	Stainless Steel
Radial Springs	Stainless Steel
Housing Assembly Clamp Plate Assembly	410 Stainless Steel
Secondary Sealing Elements	Fluoroelastomer

Alternative materials are available, consult John Crane Engineering.

Performance Recommendations

- Separation Gas Specification:
  Filtration: 3 microns and dry
  Proper consideration must be given as to the possibility of explosive mixtures.

Note:- suitable for nitrogen with a dew point down to -90^{0}C

- Operating Environment:
  Vibration levels within API617.
  Bearing housing should be well drained.
  Bearing housing should not be pressurized.
  Consideration should be given to the secondary vent piping as not to cause an excessive back pressure.
  Oil exiting the bearing cavity directed at the separation seal should be noted at design.

Alternative Applications

The Type 83 is normally supplied as a double separation seal as depicted in this data sheet however they can be supplied as individual carbon rings for use on other applications where an effective barrier is required i.e. bearing chambers, fans, blowers, gearboxes and other high speed low pressure applications. - Please consult John Crane Engineering.

For your nearest John Crane facility, please contact one of the locations below.

Europe
Slough, UK
Tel: +44-1753-224000
Fax: +44-1753-224224

North America
Morton Grove
Tel: +1-847-967-2400
Fax: +1-847-967-3915

Latin America
São Paulo, Brazil
Tel: +55-11-3371-2500
Fax: +55-11-3371-2599

Middle East & Africa
Dubai, United Arab Emirates
Tel: +97-1488-39510
Fax: +97-1488-37766

Asia Pacific
Singapore
Tel: +65-6512-5200
Fax: +65-6512-5233

If the products featured will be used in a potentially dangerous and/or hazardous process, your John Crane representative should be consulted prior to their selection and use. In the interest of continuous development, John Crane Companies reserve the right to alter designs and specifications without prior notice. ISO 9001, ISO 14001, Certified. Details available on request.

smiths
bringing technology to life

©2008 John Crane Print 04/08 www.johncrane.com