Sealing Solutions for Sulzer AHLSTAR[UP] series

JCS1, JCS1F, JCS2
Safeunit Ultima
SmartFlow

smiths
bringing technology to life

Safeseal JCS1

Advanced design, good technical solutions

Typical applications:

Safeseal **JCS1** is a rugged, pump integrated single seal designed for clean and lubricating fluids such as water, oils, solvents and low consistency paper stocks. The **JCS1** seal is designed especially for the Sulzer AHLSTAR^{UP} pump series.

The **JCS1** seal is easy to install from the impeller side. **JCS1** is very advanced in its technical capabilities including a patented drive mechanism for seal faces and self aligning, elastically mounted thrust ring.

Features and benefits:

- Balanced design provides undisturbed operation even with sudden pressure shocks.
- Single spring on atmospheric side located in the stationary part of the seal. Material is corrosion resistant. Shaft misalignment does not pulsate the spring nor wear out the O-ring.
- SiC/Carbon or SiC/SiC seal faces as standard materials.
- No measurements required for installation. Easy installation reduces risk of human error.
- Seal installation does not require back plate removal and the seal is fastened with one bolt which guarantees fast, trouble free installation.
- Torque transmission with super elastic devices combined with no drive pins at seals faces. Seal faces do not crack at start-up.
- Seal has an integrated splash guard.

Safeseal JCS1F

A reliable seal for demanding conditions with product recirculation API plan 11 or external water flush

Typical applications:

JCS1F single seal operates on API plan 11 for hot water applications or on a continuous external water flush principle when needed. It is designed for demanding applications where clean water flush lubricates seal faces. Typical low solids applications include hot water or paper stock pumps at pulp mill washing and screening facilities.

Utilizes the same design features and principles as JCS1 seal described above.

Pressurized continuous water flush through restricted throttle design into the process provides clean lubrication for the seal faces. This set up also eliminates the possible dry run during the pump start-up.

Safeseal JCS2

Double-balanced design, ultimate reliability

Typical applications:

The double-balanced design of Safeseal **JCS2** ensures reliable and long-lasting operation under the most demanding conditions. This seal is typically used in pumps for abrasive and environmentally hazardous liquids in pulp and paper mills. Applications include also demanding services in food, metal and fertilizer processes.

The **JCS2** seal is especially designed for the Sulzer AHLSTAR^{UP} pump series.

Features and benefits:

- Seal utilizes the integrated and advanced SmartFlow seal water control technology.
- More than 90% seal water savings compared to normal flow control system.
- Single spring located in the stationary part of the seal. Material is corrosion resistant and flushed with seal water.
- Shaft misalignment does not pulsate the spring nor wear out the O-ring.
- Heat shrunk SiC/SiC, SiC/Carbon seal faces as standard materials.
- The piston design of the seal enables large axial movement that does not have impact on spring loading.
- No measurements required for installation. Easy installation reduces risk of human error.
- Seal installation does not require back plate removal and the seal is fastened with one bolt which guarantees fast trouble free installation.
- Torque transmission with super elastic devices combined with no drive pins at seals faces. This eliminates possible start-up failures.
- Even in standard models, PTFE is used in O-ring positions where they are exposed to the process liquid.
- The special double-balanced design allows the use of both pressurized and non-pressurized sealant.
- Seal has an Integrated splash guard.

patent pending

John Crane Safematic Seal Support Systems

Safeunit Ultima

Model SUP-C-08-00/AC1

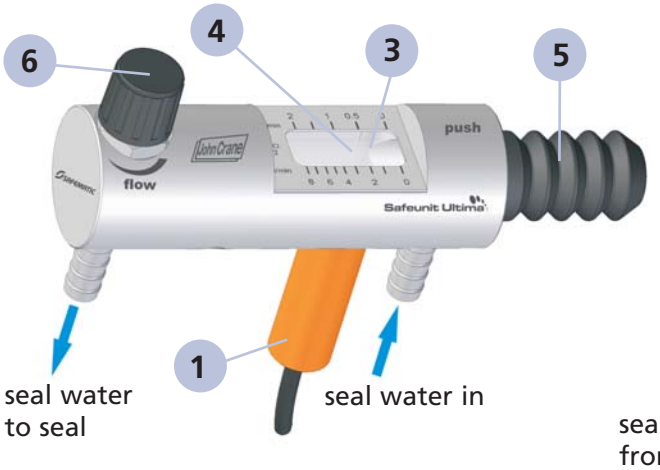

Model SUD-C-08-10/AC1

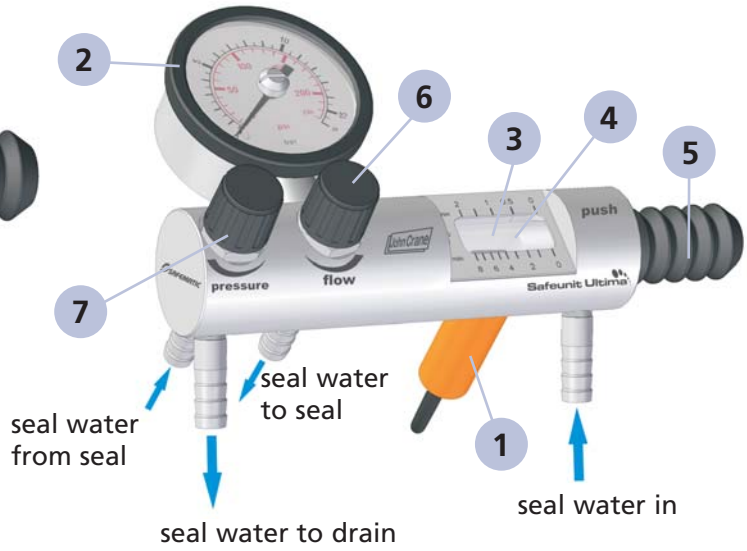

patent pending

1. Inductive low flow alarm sensor
2. Pressure gauge with memory pin
3. Flow rate indicator
4. Flow memory indicator
5. Push clean button
6. Flow regulating valve
7. Pressure regulating valve (for double seal application)

Safeunit Ultima features and benefits

- Controls and monitors seal water flow and pressure
- Detects internal seal leakage and packing wear
- Reduces and pre-determines maximum seal water consumption
- Can back flush and clean with equipment running
- Simplifies pump setup
- Greatly reduces multi-component installation cost
- Flow indicator and pressure gauge with memory pin
- Unique non-clog valves
- Available with optional electrical alarms
- Check valve integrated

Technical Specifications:

Seal water temperature: max. 75 °C (175 °F)

Seal water pressure: max 25 bar (360 psi)

Flow: 0-8 l/min (0-2 GPM)

Other options available.

SmartFlow Control

To be used with JCS2 seals

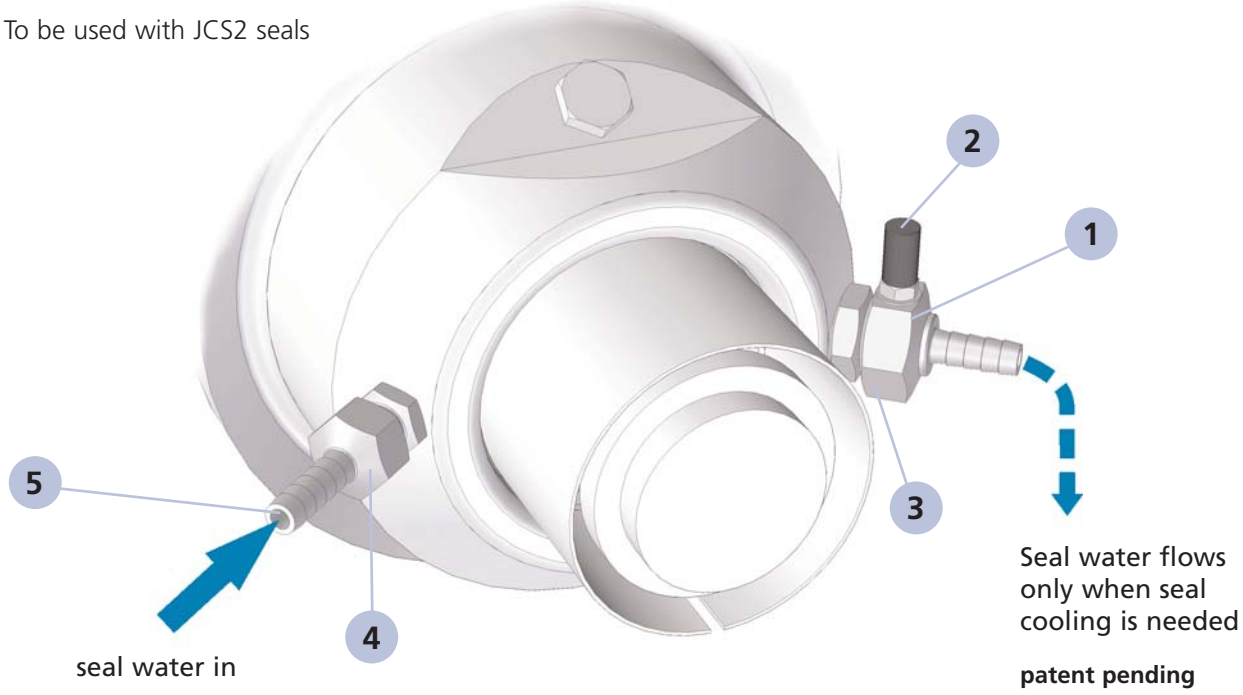

1 **SmartFlow Control valve**

2 Integrated bleed valve for venting

3 Integrated safety valve provides security.

4 Integrated check valve to prevent water supply line contamination.

5 Option for inductive switch that indicates proper function.

SmartFlow Control – Eco-effective seal water control solution for increased reliability

System operation is based on heat-activated shape memory alloy that functions mechanically opening and closing the flow channel.

Product features and benefits

- Remarkable reduction of seal water usage
- A compact unit
- Reliable operation based on proven technology
- Simple installation
- Mechanical operation, no need for electricity, no wiring needed
- Automatic operation is fast and accurate
- No adjustments needed
- Maintenance-free operation
- Fail-safe construction prevents seal failures in case of fault situations
- Manufactured of recyclable materials

Technical Specifications:

Product temperature: max 150 °C (300 °F)

Seal water temperature: max. 45 °C (100 °F)

Process pressure: max 14 bar (200 PSI)

Seal water pressure 3-16 bar (44- 230 PSI) and at least 2 bar (28 PSI) higher than process pressure

General requirements for seal water quality have to be met.

Please consult John Crane for further instructions.

JCS1

Technical specifications:

Stuffing box pressure:	max. 16 bar (225 psi)
Speed:	max. 20 m/s (65 ft/s)
Temperature:	max. 90 °C (195 °F)

Materials:

Seal faces:	SiC/Carbon or SiC/SiC
O-rings:	PTFE, EPDM, Viton®
Metal parts:	Standard materials EN 1.4436/1.4460 (AISI316/329)
Springs:	EN 1.4436 (AISI 316)

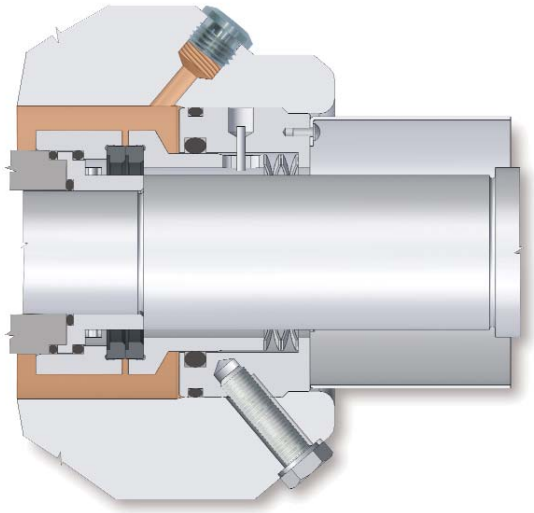

JCS1F

Technical specifications:

Stuffing box pressure:	max. 16 bar (225 psi)
Speed:	max. 20 m/s (65 ft/s)
Temperature:	max. 120 °C (250 °F)

Materials:

Seal faces:	SiC/Carbon or SiC/SiC
O-rings:	PTFE, EPDM, Viton®
Metal parts:	Standard materials EN 1.4436/1.4460 (AISI316/329)
Springs:	EN 1.4436 (AISI 316)

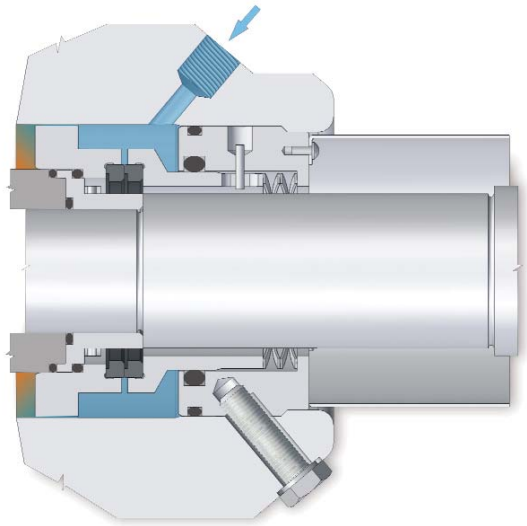

JCS2

Technical specifications:

Stuffing box pressure:	max. 25 bar (360 psi)
Seal water pressure:	max. 15 bar (215 psi)
Speed:	max. 20 m/s (65 ft/s)
Temperature:	max. 180 °C (350 °F)

Materials:

Seal faces:	SiC/SiC, SiC/SiC
O-rings:	PTFE (product side) EPDM, Viton®
Metal parts:	Standard materials EN 1.4436/1.4460 (AISI316/329)
Springs:	EN 1.4436 (AISI 316)

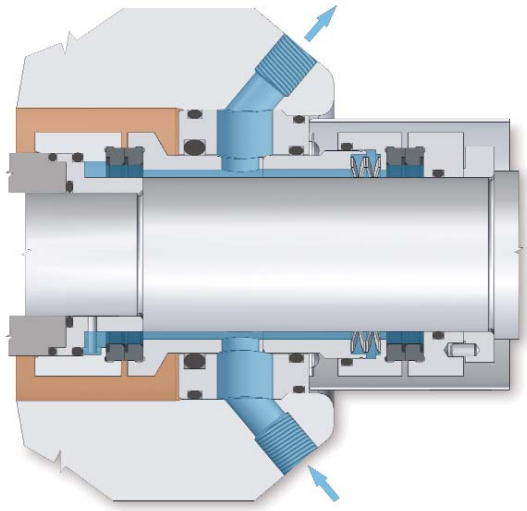

Type JCS seal identification System

E.g. JCS2-50-QRMQ-307645

XXXX-XX-X_1-X_2-X_3-X_4-XXXXXX

① ② ③ ④

① Type of seal: JCS1: single seal
JCS1F: single seal with flush
JCS2: double seal

② Shaft diameter: (mm)

③ Material codes:

X_1	X_2	X_3	X_4
Q-SiC/SiC	R-EN 1.4436/1.4460	M-PTFE	Q-Sic/Sic
G-SiC/carbon	(AISI 316/329)	E-EPDM	G-SiC/carbon
		V-Viton®	O-single seal
		X-Other	

④ Assembly drawing number

John Crane has a comprehensive network of highly trained representatives, distributors, and installation and maintenance personnel. Contact your local John Crane sales office for more information.

For your nearest John Crane facility, please contact one of the locations below.

John Crane Safematic Oy
Muurame, Finland
Tel: 358-10-8525-611
Fax: 358-10-8525-600

Europe
Slough, UK
Tel: 44-1753-224000
Fax: 44-1753-224224

North America
Morton Grove
Tel: 1-847-967-2400
Fax: 1-847-967-3915

Latin America
São Paulo, Brazil
Tel: 55-11-3371-2500
Fax: 55-11-3371-2599

Middle East & Africa
Dubai, United Arab Emirates
Tel: 971-4-8839510
Fax: 971-4-8837766

Asia Pacific
Singapore
Tel: 65-6512-5200
Fax: 65-6512-5233

If the products featured will be used in a potentially dangerous and/or hazardous process, your John Crane representative should be consulted prior to their selection and use. In the interest of continuous development, John Crane Companies reserve the right to alter designs and specifications without prior notice. ISO 9001, ISO 14001, ISO/TS 16949 Certified. Details available on request.

smiths
bringing technology to life

©2007 John Crane Print 11/07 www.johncrane.com B-Sulzer/Eng