Mechanical Seals for ABS Scanpump

SE1, SE1F, SEG, SEW and SE2C

smiths
bringing technology to life

Safeseal SE1 and SE1F

Simple design, good technical solutions

Typical applications

Safeseal SE1 is a special seal designed for clean and lubricating fluids such as water, different types of oils, solvents, and stock (consistency up to 2%) and other slurries. SE1F is equipped with flush connection and a throttle bushing. These seals are typically used in pumps in paper and board mills as well as other slurry services.

The SE1 seal is easy to install and maintain. In spite of its simple design, SE1 is very advanced in its technical capabilities, including, for example, a patented thermal method for seal face holding and an elastic thrust ring.

Features:

1. Balanced design
Undisturbed operation even with sudden pressure shocks.

2. Heat shrunk seal faces
Ensures correct face alignment at all temperatures recommended for this seal.

3. Spring located in the stationary body of the seal
Shaft misalignment does not pump up the spring or wear out the O-ring. Spring is not in contact with process liquid.

4. SiC/Carbon a standard option for seal faces
SiC/Carbon holds up well under high speeds found in, for example, condensate pumps and other high temperature pumps.

5. Installation against the shaft shoulders
Easy installation reduces risk of human error. No measurements required for installation.

6. No drive pins
Seal faces do not crack at start-up.

7. Front pull-out design
Removable from the impeller side.

8. Available in different materials
Selection covers all possible single seal applications.

9. Available as a cartridge seal
By using an ABS cartridge tool the seal becomes a true cartridge seal.

Safeseal SEW and SEG

A reliable, long-lasting quench or grease quench seal for demanding conditions

Typical applications

SEW is a seal operating on a non-pressurised water rinsing (quench) principle, and it is designed for the most demanding applications in the paper industry, where reliable and long-lasting operation is required from a seal. Typical applications include stock pumps at pulp mill washing and screening facilities, as well as high temperature condensate pumps.

Features:

1. Balanced design
Undisturbed operation even with sudden pressure shocks.

2. Heat shrunk seal faces
Ensures correct face alignment at all temperatures recommended for this seal.

3. Spring located in a stationary body
Shaft misalignment does not pump up the spring or wear out the O-ring. Spring is not in contact with process liquid.

4. Installation against the shaft shoulders
Easy installation reduces risk of human error. No measurements required for installation.

5. No drive pins at seals
Seal face does not crack at start-up.

6. Available in different materials
Selection covers all possible single seal applications.

7. Front pull-out design
Removable from the impeller side.

8. Non-pressurised seal water rinsing (quench)
Possible to cool seal with non-pressurised seal water at high temperatures. V-ring prevents water leakage from the seal.

9. Available as a cartridge seal
By using an ABS cartridge tool the seal becomes a true cartridge seal.

10. Available with grease lubrication
Safeseal SEG can be used with grease quench to eliminate seal water.

Safeseal SE2C

Double-balanced design, ultimate reliability

Typical applications

The double-balanced design of Safeseal SE2C ensures reliable and long-lasting operation under the most demanding conditions. This seal is typically used in pumps for abrasive and environmentally hazardous liquids in cooking, evaporation, and causticising facilities in pulp mills.

Features

1. Heat shrunk seal faces.
Ensures correct face alignment at all temperatures recommended for this seal.

2. Stationary set of springs
The springs are located in the stationary body of the seal outside of the seal water preventing clogging of springs. Shaft misalignment does not pump up springs or wear out O-rings.

3. The piston-type design
Enables free axial movement, that does not have any impact on seal face loading.

4. PTFE slot rings as standard
Used in positions where they are exposed to the process. The PTFE seal advantage is that it does not jam even in process conditions involving a lot of solid material.

5. No drive pins
Milled anti-rotation slots prevent rolling of the body ring that protects the seal face. This eliminates tension peaks that would distort or break the seal face.

6. Special double-balanced design
Allows the use of both pressurised and non-pressurised seal water.

Technical specifications	
Stuffing box pressure	max 15 bar (215 psi)
Speed	max 20 m/s /65 ft/s)
Temperature	max 120ºC (250ºF)
Materials	
Seal faces	SiC/Carbon or SiC/SiC
O-rings	EPDM, PTFE, Viton®
Metal parts	Standard material AISI 329 (Titanium, UHB)
Springs	Nimonic steel

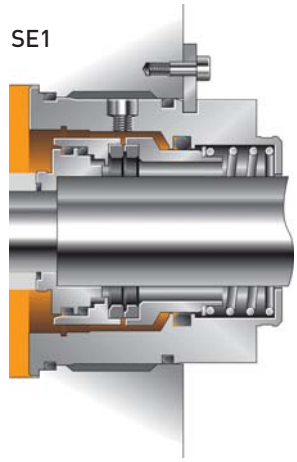

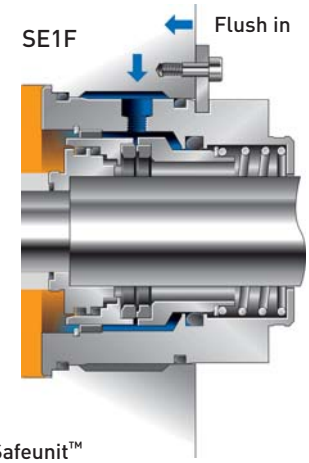

Safeunit™

0 bar
0.5 - 1.5 l/min

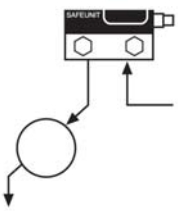

Technical specifications	
Stuffing box pressure	max 15 bar (215 psi)
Speed	max 20 m/s /65 ft/s)
Temperature	max 150ºC (300ºF)
Materials	
Seal faces	SiC/Carbon or SiC/SiC
O-rings	EPDM, PTFE, Viton®
Metal parts	Standard material AISI 329 (Titanium, UHB)
Springs	Nimonic steel

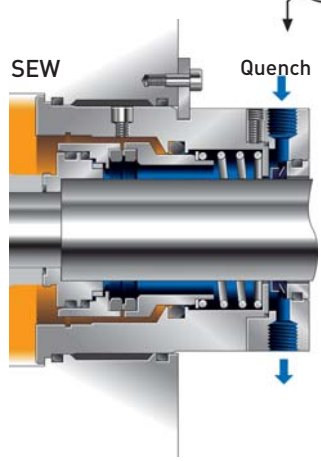

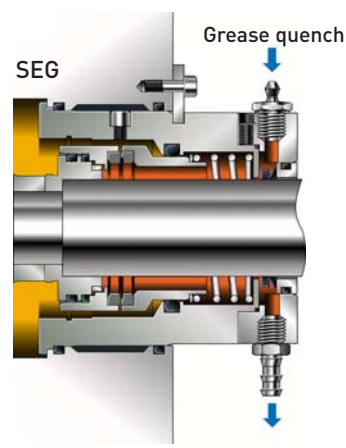

Technical specifications	
Stuffing box pressure	max 20 bar (290 psi)
Seal water pressure	max 15 bar (215 psi)
Speed	max 30 m/s (90 ft/s)
Temperature	max 180ºC (350ºF)
Materials	
Seal faces	SiC/SiC (product side) SiC/Carbon (atmosphere side)
O-rings	PTFE (product side)
Alternatives:	EPDM, Viton® etc.
Metal parts	Standard material AISI 329 (Titanium, UHB)
Springs	Nimonic steel

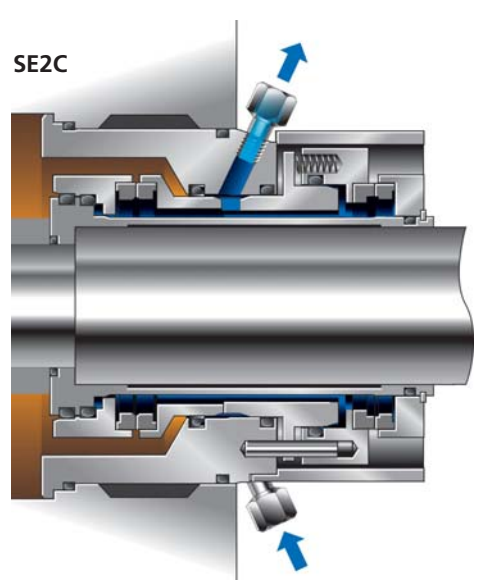

Safeunit™

2-15 bar
0.5 - 3 l/min

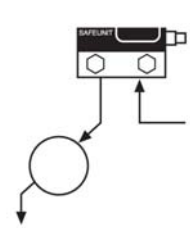

Mechanical Seals for ABS Pumps

SE Seal Identification Codes

E.g. SE2C-70-QRMG-304568

XXX-XX-X_1-X_2-X_3-X_4-XXXXXX

① ② ③ ④

① Type of seal
- SE1; single seal
- SE1F; single seal with flush
- SEW; quench seal
- SE2C; double seal, cartridge

② Shaft diameter; (mm, in)

③ Material codes

X_1	X_2	X_3	X_4
Q-SiC/SiC	R-AISI 316/329	M-PTFE	O-single seal
G-SiC/carbon	T-titanium	E-EPDM	G-SiC/carbon
T-TC/TC	U-UHB 904 L	V-Viton®	V-V-ring (quench)

④ Drawing number

For your nearest John Crane facility, please contact one of the locations below.

John Crane Safematic Oy
Muurame, Finland
Tel: 358-10-8525-611
Fax: 358-10-8525-600

Europe
Slough, UK
Tel: 44-1753-224000
Fax: 44-1753-224224

North America
Morton Grove
Tel: 1-847-967-2400
Fax: 1-847-967-3915

Latin America
São Paulo, Brazil
Tel: 55-11-3371-2500
Fax: 55-11-3371-2599

Middle East & Africa
Dubai, United Arab Emirates
Tel: 971-4-8839510
Fax: 971-4-8837766

Asia Pacific
Singapore
Tel: 65-6512-5200
Fax: 65-6512-5233

If the products featured will be used in a potentially dangerous and/or hazardous process, your John Crane representative should be consulted prior to their selection and use. In the interest of continuous development, John Crane Companies reserve the right to alter designs and specifications without prior notice. ISO 9001, ISO 14001, ISO/TS 16949 Certified. Details available on request.

smiths
bringing technology to life

©2007 John Crane Print 11/07 www.johncrane.com