TYPE 48XPVL

TYPE 48XPVL

A – Special seat / mating ring
B – Face / primary ring
C – Spring
D – Gland plate
E – Sleeve
F – Spring
G – Face / primary ring
H – Seat / mating ring
I – Drive collar
J – Setting spacer

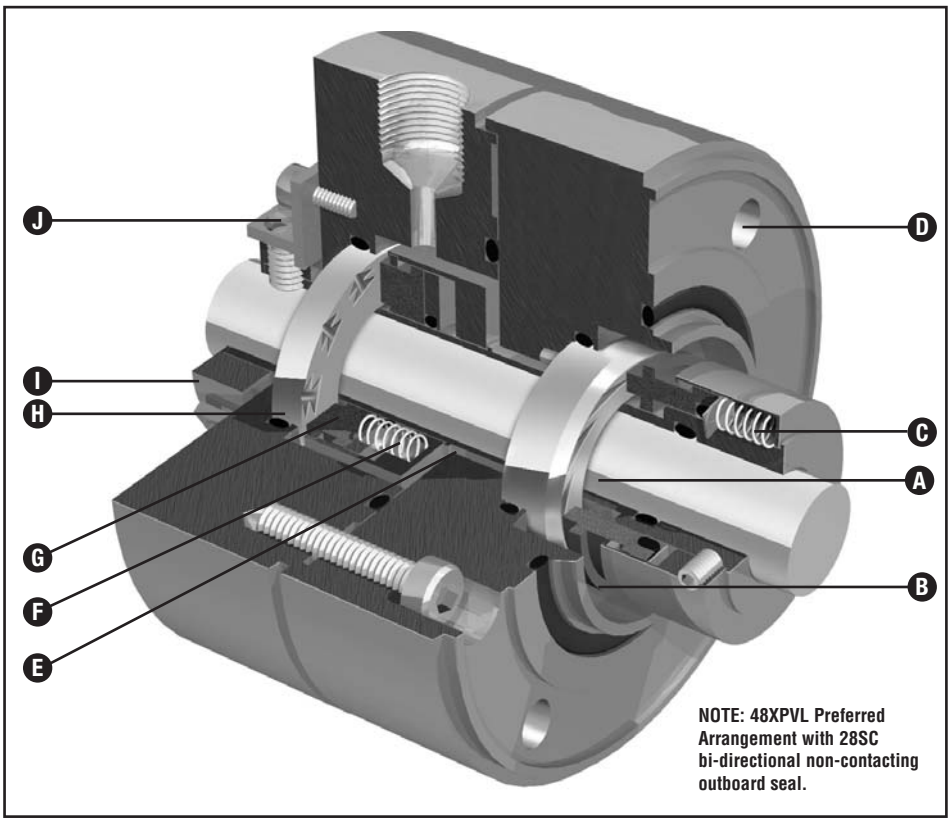

NOTE: 48XPVL Preferred Arrangement with 28SC bi-directional non-contacting outboard seal.

LaserFace™

Product Description

- The 48XPVL is an extension of the John Crane LaserFace and spiral groove technology. The 48XP O ring pusher seal is designed with the requirements of API682 applications in mind, and is particularly applicable where the application is very close to or at the sealed products vapour pressure.
- The 48XPVL allows the sealing of high vapour pressure hydrocarbon applications without the need for complex seal support systems.
- The unique seal face technology, drawn from both patented LaserFace and spiral groove technologies ensures maximum seal face lubrication through a variety of pumped fluid operating conditions. Strong hydrodynamic pressure forces are developed, separating the seal faces and providing high levels of lubrication and reduced face wear.
- The 48XPVL is always supplied in a cartridge assembly, with a non-contacting or dry running outer containment seal. This will ensure minimal leakage to atmosphere by collection, containment and channelling of primary seal leakage to flare or recovery system.

Design Features/Benefits

- Seal life is extended by full seal face lubrication with low leakage levels.
- Computer optimised seal components to minimise the effects of pressure and temperature distortion.
- Designed to comply with API682.
- Optimised designs to provide reliability with vapour pressure margins outside of the envelope of API682 applications.
- Multi-spring design for even face loading.
- Dimensionally interchangeable with other 48 type seals including the new 48XP.
- 48XPVL seals can be operated without the need of a process flush of the inboard seal.

Performance Capabilities

Temperature: -40°C to 260°C/ -40°F to 500°F
Pressure: 42 bar g / 610 psig
Speed: up to 25 m/s/ 5000 fpm
End Play / Axial Float Allowance: ±0.04mm (dynamic) / 0.002"

Runout/ Out of Squareness: 0.05 mm/ 0.002"

Note: for temperature below 0 °C (32 °F) prevention against ice build up under static conditions must be taken (e.g. warm Nitrogen quench).

TYPE 48XPVL

Type 48XPVL Preferred Arrangement/Dimensional Data

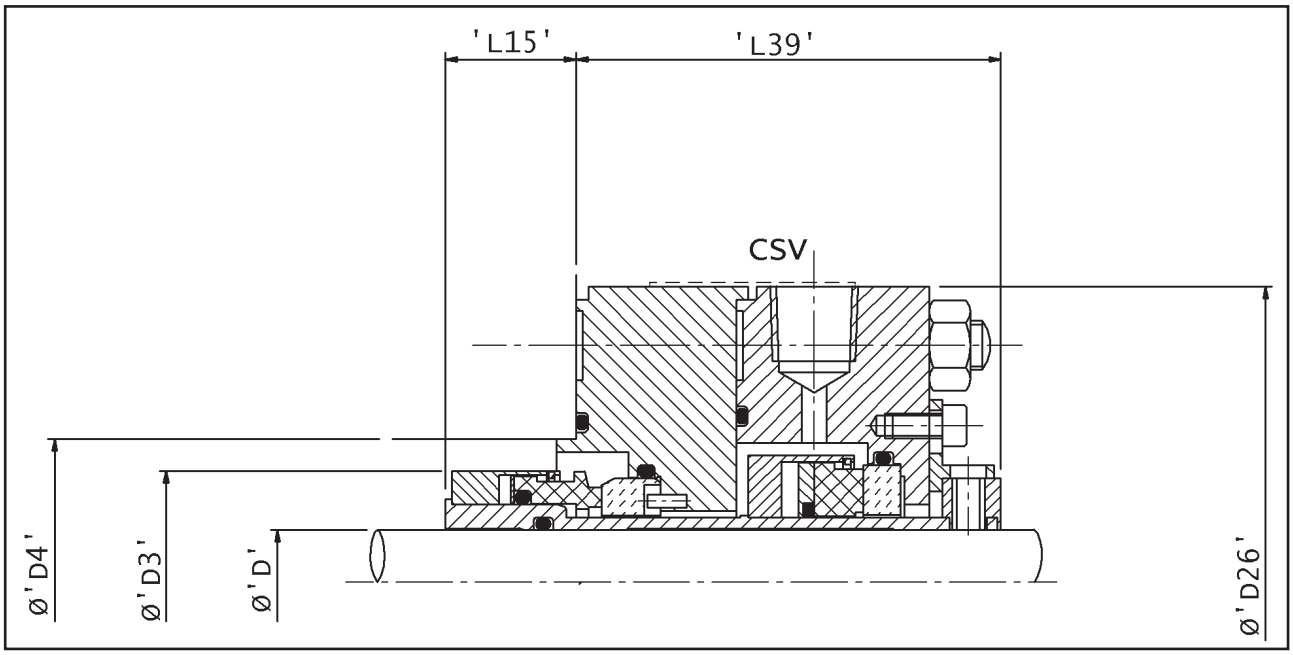

Type 48XPVL Dimensional Data

Seal Head Nominal Seal Size (inches)	Nominal Size Code	D (mm)	D (Inches)	D3 (mm)	Min D4 (mm)*	D26 (mm)	L15 (mm)	L39 (mm)
1.500	0381	25.4	1.000	54.1	69.8	144	31.8	103.4
1.625	0412	28.58	1.125	60.5	76.2	147	39.8	103.4
1.750	0444	31.75	1.250	63.6	79.3	150	41.7	103.4
1.875	0476	34.93	1.375	66.8	82.5	153	39.8	103.4
2.000	0508	38.1	1.500	70	85.7	165	40.1	103.4
2.125	0539	41.28	1.625	76.3	92	169	48.5	103.4
2.250	0571	44.45	1.750	79.5	95.2	172	48.8	103.4
2.375	0603	47.63	1.875	82.7	98.4	175	48.8	103.4
2.500	0635	50.8	2.000	85.7	101.6	178	48.8	103.4
2.625	0666	53.98	2.125	89	104.7	181	48.8	103.4
2.750	0698	57.15	2.250	92.2	107.9	184	48.8	103.4
2.875	0730	60.33	2.375	95.4	111.1	188	50.6	103.4
3.000	0762	63.5	2.500	97	112.7	191	49.8	103.4
3.125	0793	66.68	2.625	100.1	115.8	194	49.7	106.4
3.250	0825	69.85	2.750	104.9	120.6	197	49.3	106.4
3.375	0857	73.03	2.875	108.1	123.8	200	47.7	111.2
3.500	0889	76.2	3.000	111.3	127	203	47.3	111.2
3.625	0920	79.38	3.125	114.4	130.1	207	47.7	111.2
3.750	0952	82.55	3.250	117.6	133.3	225	47.3	111.2
3.875	0984	85.73	3.375	120.8	136.5	228	47.6	111.2
4.000	1016	88.9	3.500	124	139.7	232	47.5	111.2
4.125	1047	92.08	3.625	130.3	146	235	47.5	111.2
4.250	1079	95.25	3.750	133.5	149.2	238	49.8	111.2
4.375	1111	98.43	3.875	136.7	152.4	241	49.8	111.2
4.500	1143	101.6	4.000	139.8	155.5	244	50.2	111.2
4.625	1174	104.78	4.125	143	158.7	248	47.5	111.2
4.750	1206	107.95	4.250	146.2	161.9	251	47.3	111.2

* For dimensions below D4 external spigot / rabbet will be used

TYPE 48XPVL

Basic Pressure Rating

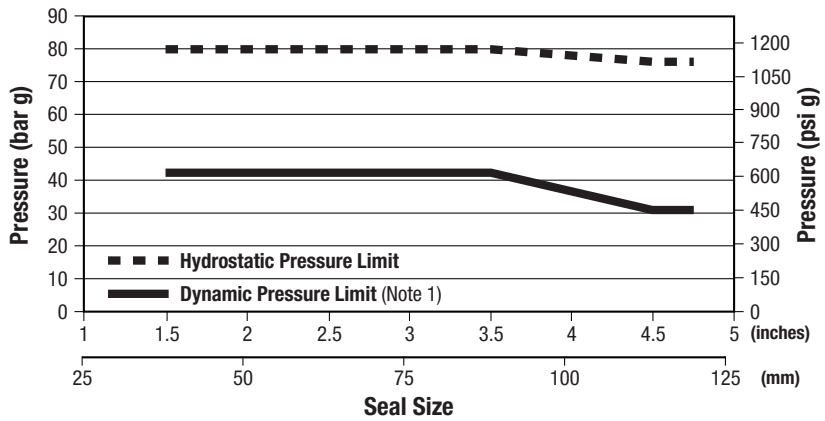

The Basic Pressure Rating is for a standard seal, as shown in the typical arrangement, when installed according to the criteria given in this data sheet and generally accepted industrial practices.

The Basic Dynamic Pressure Rating assumes stable operation at 3600 rpm in a clean fluid. When used with the Multiplication Factors, the Basic Pressure Rating can be adjusted to provide a conservative estimate of the dynamic pressure rating.

Contact John Crane Engineering for process services outside this range or a more specific assessment of the dynamic pressure rating.

Multiplier Factors

	Selection Considerations	Multiplier Factors
Speed	Up to 3600 rpm Above 3600 rpm to a maximum of 25m/s	x 1.00 Note 2

NOTES:

1. Note that the minimum pressure for vapour, mixed phase or liquid operation is 15 bar. For application with lower process pressures please contact John Crane.
2. Please contact John Crane to confirm the duty rating.

Leakage

The Type 48XPVL is a seal for flashing hydrocarbons designed to operate in a non-contacting sealing mode, consequently the leakage from the primary seal will be approximately x50 that of a conventional plain face seal. The actual seal leakage to the flare or vapour recovery system will be dependant on actual make up and the temperature margin (to SVP) of the pumped fluid. Where tighter leakage control is required in flashing hydrocarbon applications then a conventional Type 48XP should be used. This seal offers a primary seal interface leakage control, allowing leakage rates comparable with a plain face seal through unique patented John Crane LaserFace technology.

Outboard seal leakage will be dependant on the containment seal type employed, and the pressure in the flare / vapour recovery system. Typical leakage rates for a Type 28SCBD arrangement (preferred solution), with system pressures not exceeding 10psi will be <200ppm.

Materials of Construction

Description	Material	
Seal Components	Standard	Options
Primary ring inboard	Carbon Antinomy Impregnated	Consult John Crane
Primary ring outboard	Carbon Antinomy Impregnated	Consult John Crane
Mating ring LaserFace	Tungsten Carbide	Sintered Silicon Carbide
Mating ring Outboard	Tungsten Carbide	Sintered Silicon Carbide
O-rings	Fluorocarbon	Perfluoroelastomer, Nitrile
Springs	Alloy C-276 (UNS N 10276)	Consult John Crane
Adaptive Hardware		
- gland plate	316 Stainless Steel	Consult John Crane
- sleeve	316 Stainless Steel	Consult John Crane
- drive collar/screws	316 Stainless Steel	Consult John Crane
- keys/pins	316 Stainless Steel	Consult John Crane

TYPE 48XPVL

Application Criteria

The 48XPVL cartridge seals may be customised for specific installations after review and evaluation by John Crane Engineering. The following data is needed to evaluate the proposed service:

- Make and Model of Equipment
- Shaft or Sleeve OD
- Seal Cavity Dimensions
- Speed
- **Process Fluid**
  - Specific Gravity
  - Box Pressure
  - Vapour Pressure
  - Temperature

For your nearest John Crane facility, please contact one of the locations below.

Europe
Slough, UK
Tel: 44-1753-224000
Fax: 44-1753-224224

North America
Morton Grove
Tel: 1-847-967-2400
Fax: 1-847-967-3915

Latin America
São Paulo, Brazil
Tel: 55-11-3371-2500
Fax: 55-11-3371-2599

Middle East & Africa
Dubai, United Arab Emirates
Tel: 971-4-8839510
Fax: 971-4-8837766

Asia Pacific
Singapore
Tel: 65-6512-5200
Fax: 65-6512-5233

If the products featured will be used in a potentially dangerous and/or hazardous process, your John Crane representative should be consulted prior to their selection and use. In the interest of continuous development, John Crane Companies reserve the right to alter designs and specifications without prior notice. ISO 9001, ISO 14001, ISO/TS 16949 Certified. Details available on request.

smiths
bringing technology to life

©2007 John Crane Print 10/07 www.johncrane.com