TYPE 1604/2609/3609

First Edition API 682 Type C Sealol® Metal Bellows Seals

A – Inner Bellows Assembly
B – Insert
C – Inner Mating Ring
D – Packing
E – Flow Guide
F – Inner Gland
G – Spiral Wound Gasket
H – Pumping Ring
I – Outer Bellows Assembly
J – Packing Follower
K – Sleeve
L – Outer Gland
M – Outer Mating Ring
N – Setting Spacer

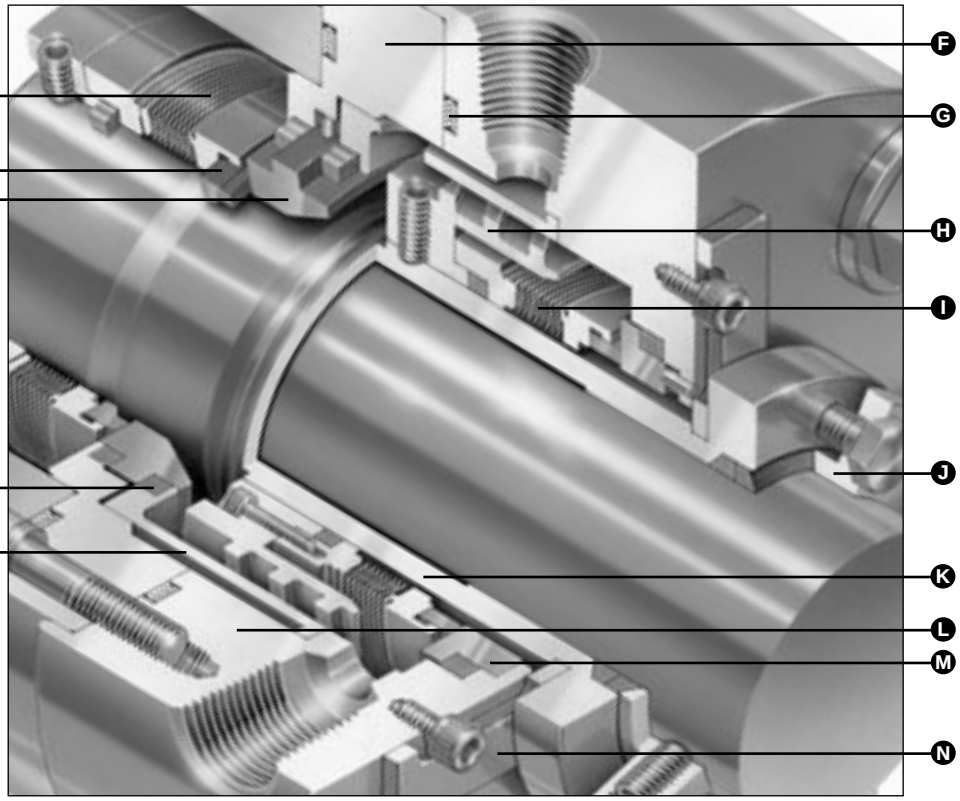

Type 2609/3609

Sealol Welded Metal Bellows

Product Description

- **Type 1604** - Single stationary bellows cartridge seal Type C, Arrangement 1.
- **Type 2609** - Dual unpressurized rotating bellows cartridge seal Type C, Arrangement 2.
- **Type 3609** - Dual pressurized rotating bellows cartridge seal Type C, Arrangement 3.

Design Features

- API 682 First Edition Qualification Tested
- Sealol Edge-Welded Metal Bellows
- Easy-To-Install Cartridge Design with Registered Fit
- Elastomer-Free Design
- Standard Components
- Withstands Reverse Pressurization (Type 2609/3609)
- Pumping Ring Standard (Type 2609/3609)
- Segmented Spring-Loaded Carbon Throttle Bushing for Effective Containment (Type 1604)
- Retained Mating Ring Available for Vacuum Service (Type 1604)

Performance Capabilities

- Temperature:
  -280°C to 425°C/-330°F to 800°F
- Pressure:
  Vacuum to 25 bar/360 psi
- Speed:
  Type 1604: up to 50 m/s / 10,000 fpm
  Type 2609/3609: up to 25 m/s / 5,000 fpm
- Shaft Size:
  30mm to 120mm/1.5" to 4.5"

Typical Applications

- Hydrocarbons
- Aromatic Fractionation Products (Benzene, Toluene, Solvents, etc.)
- Crude Oil Fractionation Products (Fuel Oil, Lubricating Oil, Gasoline, etc.)
- Chemicals, Caustics, Some Acids, Aqueous Solutions, Lubricating Liquids

Sealol is a registered trademark of John Crane.

TYPE 1604/2609/3609

First Edition API 682 Type C Sealol® Metal Bellows Seals

Type 1604 API Type C Arrangement 1 - Single Cartridge

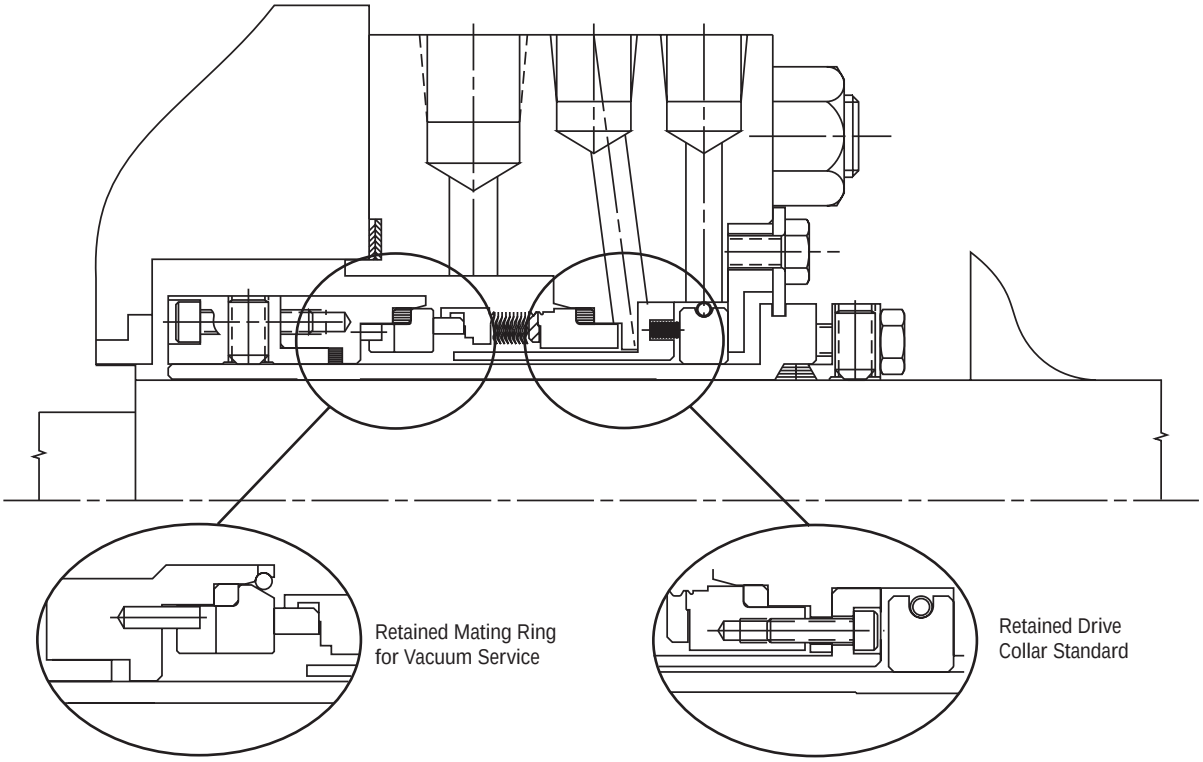

Type 2609 - API Type C Arrangement 2 - Dual Unpressurized Cartridge and
Type 3609 - API Type C Arrangement 3 - Dual Pressurized Cartridge

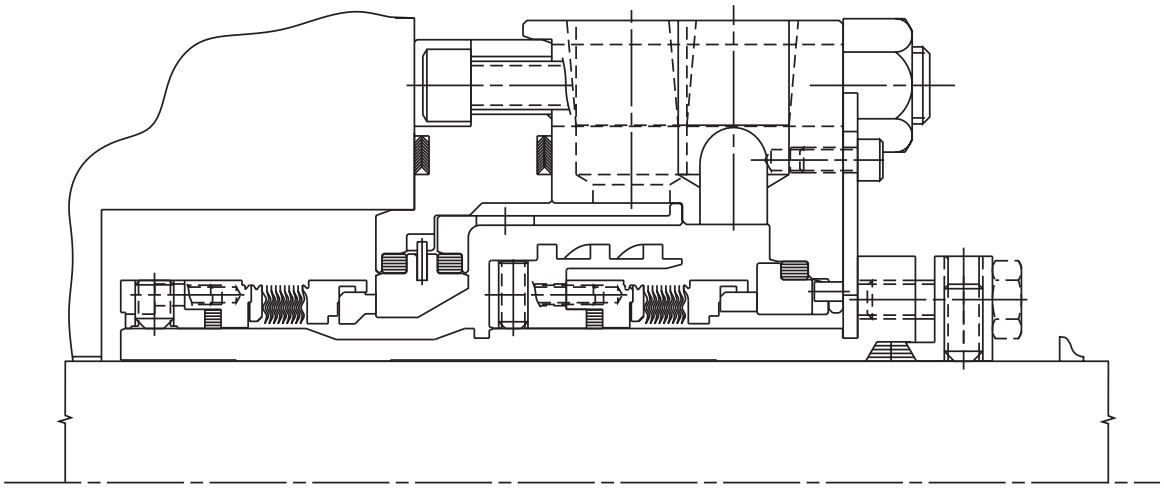

TYPE 1604/2609/3609

First Edition API 682 Type C Sealol® Metal Bellows Seals

Basic Pressure Rating

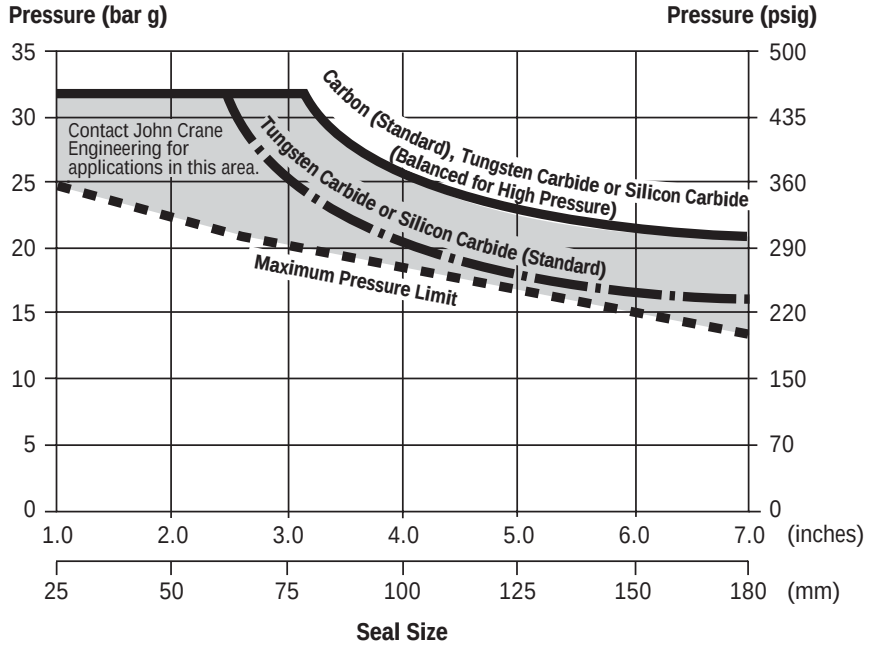

The Basic Pressure Rating is for a standard seal as shown in the typical arrangement, when installed according to the criteria given in this data sheet and generally accepted industrial practices.

The Basic Pressure Rating assumes stable operation at 3600 rpm in a clean, cool, lubricating, non-volatile liquid with an adequate flush rate. When used with the Multiplier Factors, the Basic Pressure Rating can be adjusted to provide a conservative estimate of the dynamic pressure rating.

For process services outside this range for a more specific assessment of the dynamic pressure rating, contact John Crane for more information.

NOTES:
1. Basic Pressure Rating Curve based on Single-Ply Bellows.
2. Basic Pressure Rating Curve is differential pressure applied to seal outside diameter.
3. For arrangement 3 seals, use differential pressure limits recommended in API 682, 1st Edition, Section 2.1.6.
4. Consult John Crane Engineering for applications outside these limits.
5. Consult John Crane engineering for inside diameter differential pressure vs. temperature limits for dual seals with pressurized barrier.

Multiplier Factors

	Selection Considerations	Multiplier Factors	
		Carbon vs. SiC	SiC vs. SiC T/C vs. SiC
Speed	Up to 3600 rpm Above 3600 rpm	x 1.00 x (3600/speed)	x 1.00 x (3600/speed)
Sealed Fluid Lubricity	Petrol/Gasoline, Kerosene, or Better Water and Aqueous Solutions (<80°C/176°F) Flashing Hydrocarbons* (see note 1)	x 1.00 x 0.75 x 0.60	x 1.00 x 0.75 (see note 2)
Sealed Fluid Temperature (see note 3)	Up to 80°C/175°F Up to 120°C/250°F Up to 205°C/400°F Up to 315°C/600°F Above 315°C/600°F	x 1.00 x 0.90 x 0.80 x 0.65 x 0.65	x 1.00 x 1.00 x 1.00 x 1.00 (see note 4)

* The ratio of sealed pressure to vapor pressure must be greater than 1.5, otherwise consult John Crane. If the specific gravity is less than 0.60, consult John Crane.

NOTES:
1. Specific gravity ≥ 0.6 and ratio of sealed pressure to vapor pressure > 1.5.
2. More details regarding the fluid and the operating conditions are required.
3. Temperature at the seal faces includes effects of flush, quench and cooling.
4. Contact John Crane Engineering for more information.

Example for Determining Dynamic Pressure Rating Limits

Seal: 3.5" (89mm) diameter Type 1604

Product: High Viscosity Gas Oil (HVGO)

Face Material: Carbon vs. Silicon Carbide

Temperature: 325°C/620°F

Shaft Speed: 3600 rpm

Example for Determining Dynamic Pressure Rating:

The maximum pressure for a particular application is the lesser of the maximum pressure limit curve or the pressure calculated when the multiplier factors are applied to the specific seal face material curve.

Maximum Pressure Limit Curve: 19.5 bar g/283 psig max pressure

Carbon Limit Curve: 29.3 bar g/425 psig

Calculated Limit: 29.3 bar g/425 psig x 1.00 x 1.00 x 0.65 = 19.0 bar g/276 psig

At 3600 rpm with the service conditions noted, a 3.5" (89mm) seal Type 1604 has a maximum operating pressure limit of 19.0 bar g/276psig.

TYPE 1604/2609/3609

First Edition API 682 Type C Sealol® Metal Bellows Seals

Materials of Construction

SEAL COMPONENTS	MATERIALS	
Description	**Standard**	**Options**
Seat/Mating Ring	Silicon Carbide Reaction Bonded	—
Insert/Primary Ring	Premium Grade Carbon	Tungsten Carbide Nickel Bound
Shell/Primary Ring Adapter	Alloy 42 (UNS K94100)	—
Adapter	Alloy 625 (UNS NO6625)	—
Bellows	Alloy 718 (UNS NO7718)	—
Adaptive Hardware	316 Stainless Steel	—
Static Seals	Flexible Graphite	—

Sealol Welded Metal Bellows

Design Features

- Optimum 45° Tilt Angle
- Three-Sweep Radius
- Nesting Ripple Plate Design
- Static Secondary Seal
- Light Spring Loads

Sealol Bellows Benefits

- Uniform Plate Rigidity and Stress Distribution
- Enhanced Fatigue Strength
- Pressure-Balanced by Design
- Less Heat
- Lower Power Consumption

Angular and Radial Movement

Excessive runout will have a detrimental effect on seal performance in the form of component wear or excessive leakage. API 682 limits runout as follows:

- Centering of the seal is to be by a register fit. The register fit surface shall be concentric to the shaft and have a total indicated runout (FIM) of not more than 0.005"/125 micrometers.
- Squareness of the seal chamber face to the shaft shall not exceed 0.0005" per inch of seal chamber bore (15 micrometers per cm).
- Runout of the sleeve outer diameter to the inner diameter shall be 0.001"/25 micrometers FIM.
- Shaft-to-sleeve diametrical clearance shall be 0.001" to 0.003"/25 to 75 micrometers.

Recommendations for Viscous Fluids

0 - 1,000 cSt: Standard Seal
1,000 - 3,500 cSt: Hard Face Material
3,500 - 7,500 cSt: Drive Lugs
7,500 - 10,500 cSt: Consult John Crane Engineering

NOTE: SSU (Saybolt Universal Seconds) approximately equals cSt (centistoke) x 4.6347
cP (centipoise) = cSt (centistoke) x specific gravity.

TYPE 1604/2609/3609

First Edition API 682 Type C Sealol® Metal Bellows Seals

Piping Plan Recommended with the Type 1604

API Plan 11

Recirculation from pump case through orifice to seal.

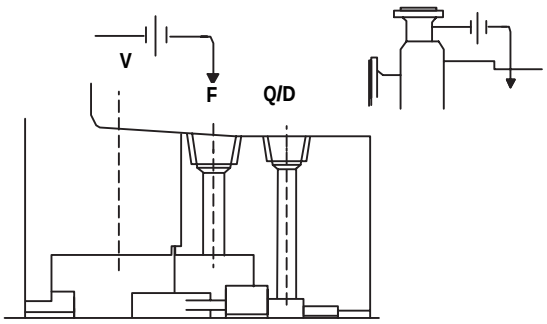

API Plan 62

External fluid quench (steam, gas, water, etc.) typically used with throttle bushing.

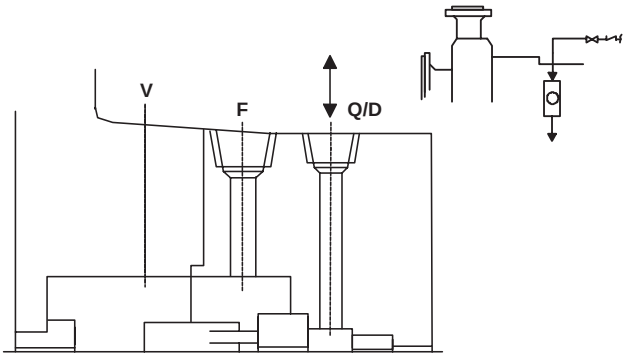

Piping Plan Recommended with the Type 2609

API Plan 52

Non-pressurized external fluid reservoir with forced circulation (typically used with dual seal arrangement 2).

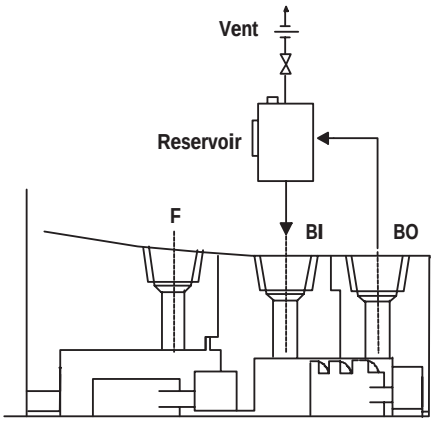

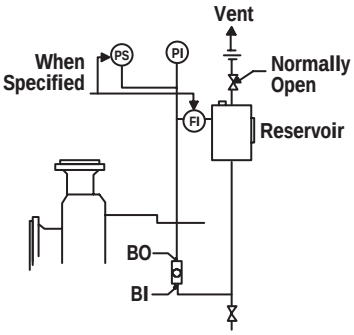

Piping Plan Recommended with the Type 3609

API Plan 53

Pressurized external fluid reservoir with forced circulation (typically used with dual seal arrangement 3).

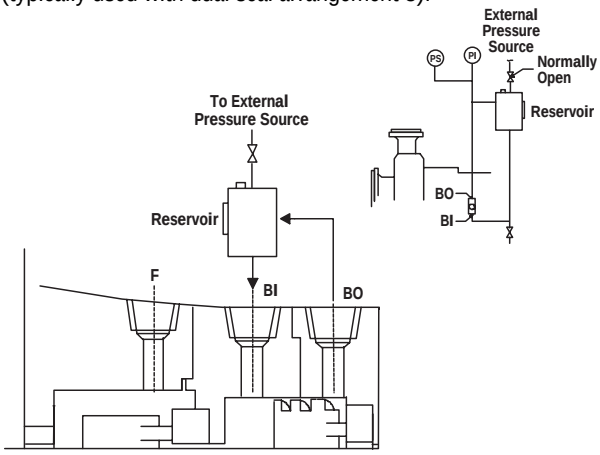

API Plan 54

Circulation of clean fluid from external system (typically used with dual seal arrangement 3).

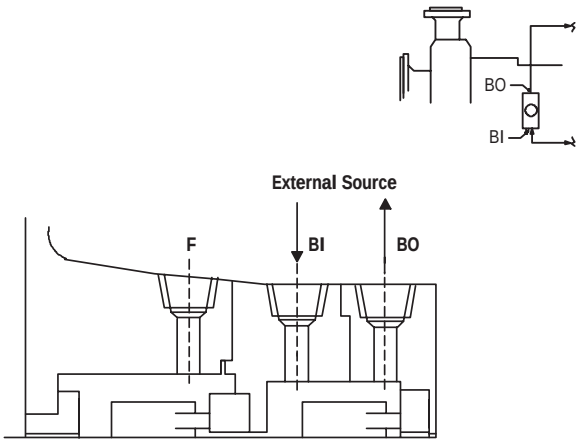

TYPE 1604/2609/3609

First Edition API 682 Type C Sealol® Metal Bellows Seals

Europe
Slough, UK
Tel: 44-1753-224000
Fax: 44-1753-224224

Latin America
São Paulo, Brazil
Tel: 55-11-3371-2500
Fax: 55-11-3371-2599

Middle East, Africa, Asia
Dubai, United Arab Emirates
Tel: 971-4-3438940
Fax: 971-4-3438970

North America
Morton Grove, Illinois USA
1-800-SEALING
Tel: 1-847-967-2400
Fax: 1-847-967-3915

smiths
A part of Smiths Group plc

For your nearest John Crane facility, please contact one of the locations above.

If the products featured will be used in a potentially dangerous and/or hazardous process, your John Crane representative should be consulted prior to their selection and use. In the interest of continuous development, John Crane Companies reserve the right to alter designs and specifications without prior notice. It is dangerous to smoke while handling products made from PTFE. Old and new PTFE products must not be incinerated.

©2002 John Crane Inc. Print 7/02