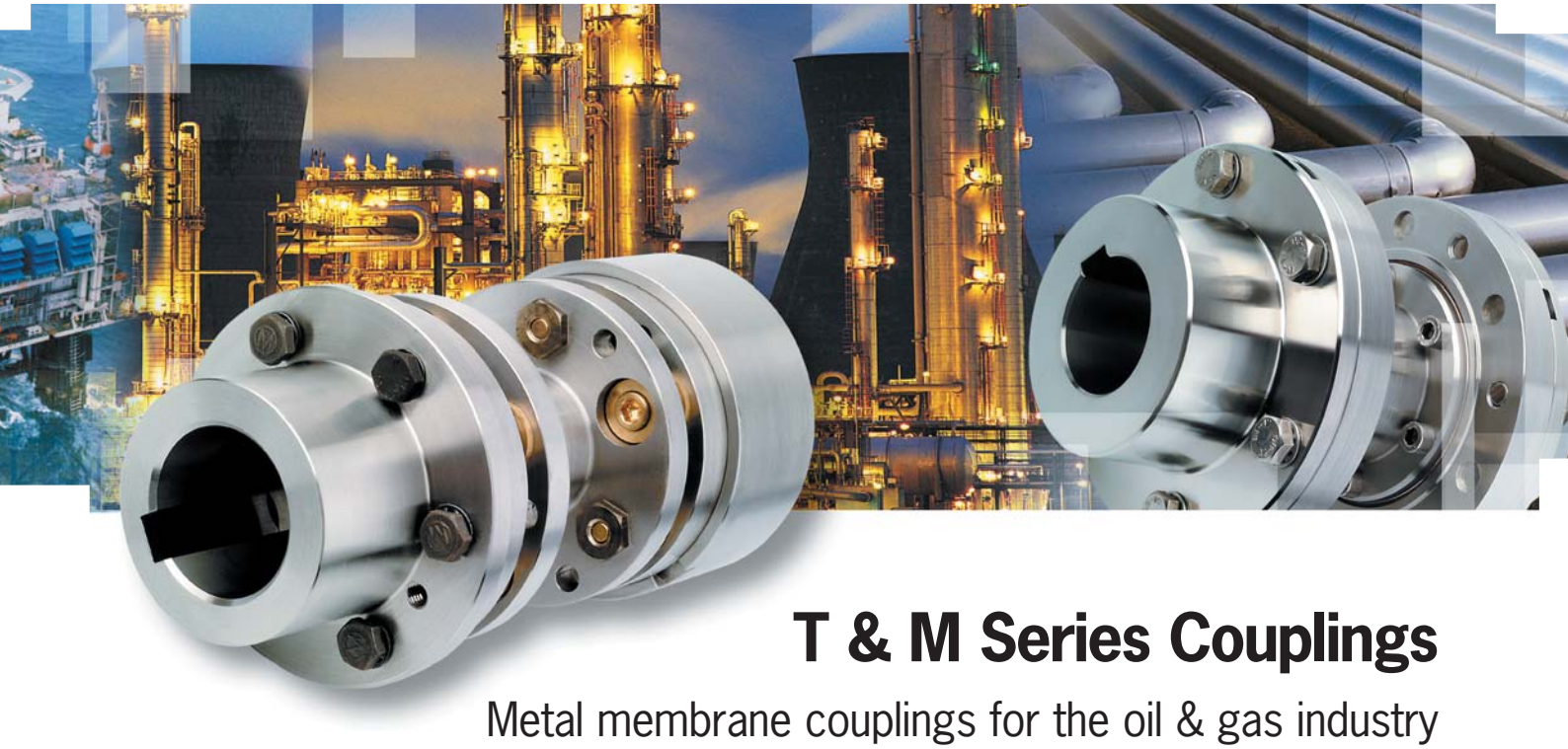

T & M Series Couplings

Metal membrane couplings for the oil & gas industry

smiths
bringing technology to life

METASTREAM™

METASTREAM™

From design stage through to plant management

Metastream couplings have for over 50 years been operating successfully in the oil & gas industry to ensure plants operate at their optimum performance. The first choice of the majority of the world's energy suppliers, constant innovations in the design & supply of Metastream couplings ensure that changing demands are met & Metastream couplings fully comply with API specifications.

Global support

As the only truly global coupling supplier, John Crane is able to offer unparalleled customer service & technical support from the design stage to commissioning & inventory management over the lifetime of the plant. Operating from over 200 facilities worldwide in over 50 countries, John Crane can offer specialised local support for installation, shaft alignment & 'trouble shooting'

T&M Series Couplings

Upstream installations, extraction, pipelines & gas transmission

Whether you are operating in the cold of Alaska or Siberia, the dusty heat of the desert, the corrosive environment of the North Sea or in areas of high humidity, whatever the environment, Metastream couplings are designed to meet your needs, safely & reliably. Metastream couplings provide solutions for both land based & off shore extraction in all areas such as gas compressors, crude oil, sea water injection, diesel, potable water pumps etc. For liquid & gas pipelines, especially remote stations where absolute reliability & safety are of paramount importance, Metastream couplings can be relied on to give exceptional performance & reliability.

Downstream installations

John Crane can offer a complete range of couplings for all applications in refineries from the pumps & steam turbines on the crude distillation units to gas compressors & onto the various final product plants & storage facilities.

Although the range of duties & sizes of couplings can be varied, by standardisation, modular design of both the T & M Series couplings ensures that spares can be kept to an absolute minimum. This is aided by various software programmes developed by John Crane.

For less critical areas, John Crane supplies the Metastream range of industrial membrane and Powerstream elastomeric couplings to meet the total requirements of any site.

Training

Training programmes combining theoretical aspects of coupling technology with hands on installation & alignment maintenance are available either on your site or at our own training facilities.

M Series Range of Couplings

The ultimate in plant safety as loads due to misalignment & overhung masses are low, ensuring resultant loads on machinery bearings are minimised so extending life & reliability. Also, should extreme overload or excessive misalignment occur, the M Series coupling will safely disconnect the drive while alerting the plant operator.

'The industry standard used by the majori

'Couplings are comple

'Very long life, predicted Mean Time B

1. Robust and carefully designed stainless steel membranes give a co
2. Cartridge design of transmission unit ensures inherent balance is r
3. In the extremely rare event of a failure the anti fly design ensures

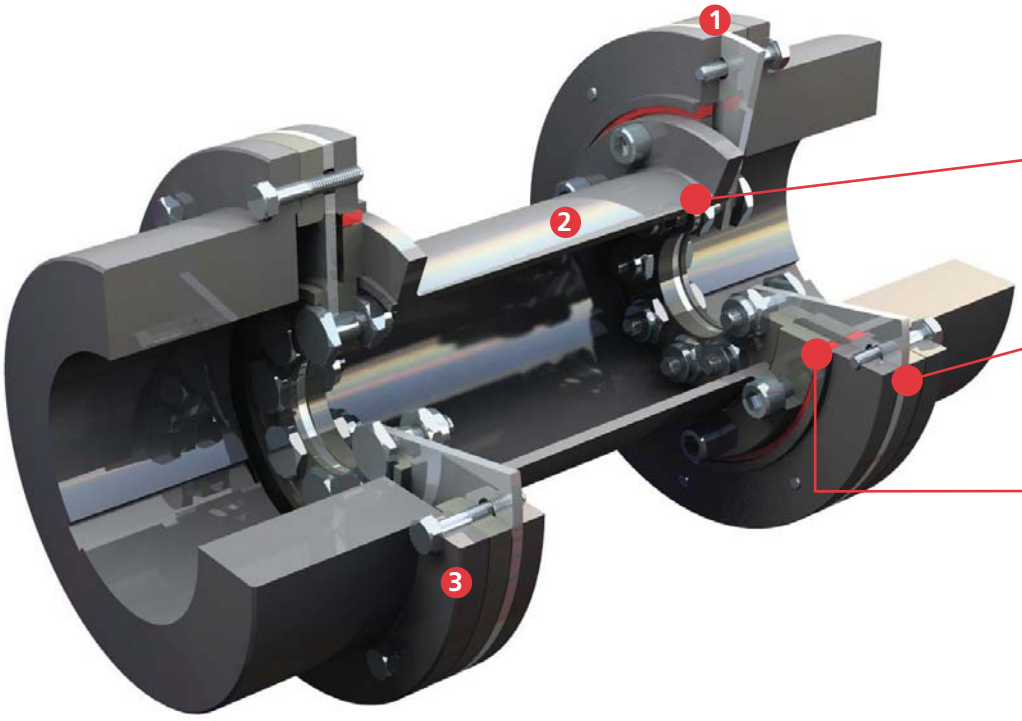

- Requires minimum stock holding of spares as membrane unit is independent of the spacer so they can be installed in different length couplings.
- Factory assembled membrane units ensure minimum downtime should they have to be replaced.
- Low friction non sparking guard bush ensures safe retention of spacer should extreme conditions occur & membranes fail.
- Can operate up to 10,000 kW / 1000 rpm (95,000 Nm) & speeds in excess of 20,000 rpm.

- Excellent power to weight ratio & low restoring moments reduce forces on bearings so increasing equipment life

ty of the world's leading energy suppliers'

tely maintenance free'

Between Failure (MTBF) up to 50 years'

mbination of transmitting high torque & corrosion resistance
etained with ease of installation
the spacer remains an integral part of the coupling

T Series Range of Couplings

The T series scalloped membrane design pioneered by John Crane offers outstanding ability to accept shaft misalignment with low imposed forces on equipment bearings.

Unique modular design allows the correctly rated coupling to be selected even on large shaft equipment, thus removing the need to supply oversize couplings.

The main drive bolts are fitted with overload collars to allow the coupling to continue operating even after severe torsional overload has occurred.

- Membranes can be visually inspected without removal or disassembly of the coupling
- Couplings have slots or compression & jacking bolts for safe & easy installation & removal of transmission unit
- Factory assembled transmission units for ease of installation on site & repeatable balancing
- Hub bolts have all metal self locking feature for security which allows the bolts to be used repeatedly without compromising their integrity
- Can operate up to 49,000 kW / 1000 rpm (470,000 Nm) & speeds in excess of 30,000 rpm

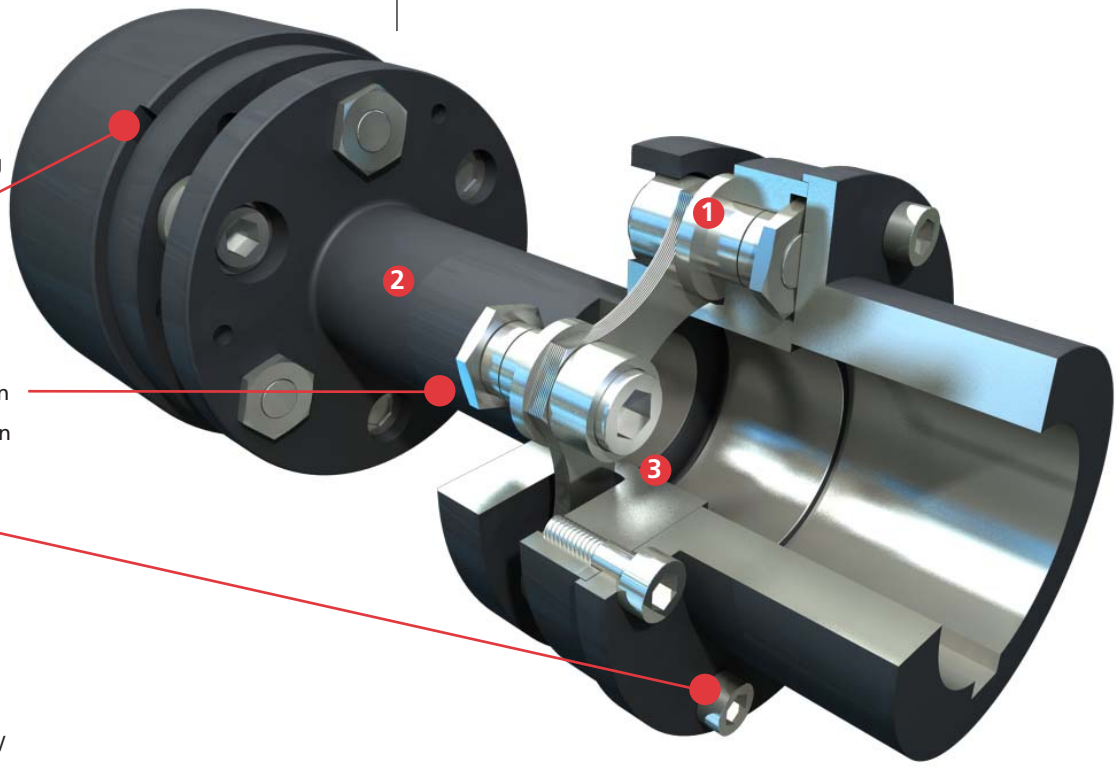

- Complies fully with the latest editions of API 610 & API 671
- Inherent balance meets AGMA class 9
- Modular design means various options are available as standard.

Standard options for Metastream couplings

The modular design of the both the T & M Series couplings allow several options & additions to the standard ranges without impacting on leadtimes. It also ensures that spares requirements are kept to a minimum.

Couplings with long DBSE (Distance Between Shaft Ends)

Both the T & M Series couplings can be supplied with long spacers in steel or composites for both horizontal & vertical applications. The M Series, manufactured in stainless steel with a composite spacer is particularly suited for use on force draught cooling fans.

Short DBSE couplings

T Series couplings can be supplied for short DBSEs (Distance Between Shaft Ends) as small as 3 mm, typically to replace maintenance intensive gear couplings.

Spark resistant couplings

Hazardous areas in refinery operations require spark resistant couplings. This is achieved by simply replacing the membrane unit on the M Series and the overload collars on the T Series. Both are replaced with components manufactured from non ferrous metals.

Axial adjustment shims

Where coupling hubs are fitted onto taper shafts, axial adjustment shims can be incorporated in the coupling. As the position of the hubs cannot be accurately set on the shaft, quickly installed shims are supplied so the correct length of the transmission unit can be easily achieved.

High Performance Turbo-Machinery Couplings

Many of the world's leading turbo-machinery manufacturers & users specify Metastream as their first choice because of the optimised power transmission capabilities allied to minimal weight & reduced moment designs.

Couplings are designed, manufactured & supplied to fully comply with the requirements of API 671 by John Crane personnel who offer unequalled customer service & technical support.

High performance couplings often require special adaptation to meet specific requirements. Torque measurement & limiting devices can be offered together with back up gear drives, electrical insulation, torsional tuning & other features that will increase the operating life of the equipment.

Electrically insulated couplings

To stop electrical currents damaging bearings when electric motors are connected to generators or have equipment connected at each end, electrical installation is incorporated in one hub. This allows standard transmission units to be used, so reducing spares inventory.

POWERSTREAM™ Couplings

In the less demanding areas where couplings to API specifications are not required, John Crane can offer a range of Powerstream elastomeric couplings. These are designed to meet a wide range of applications & manufactured to the same high exacting standards as the Metastream range of couplings.

For your nearest John Crane facility, please contact one of the locations below.

Europe
Slough, UK
Tel: +44-1753-224000
Fax: +44-1753-224224

North America
Houston
Tel: +1-713-944-6690
Fax: +1-713-946-8252

Latin America
São Paulo, Brazil
Tel: +55-11-3371-2500
Fax: +55-11-3371-2599

Middle East & Africa
Dubai, United Arab Emirates
Tel: +971-481-27800
Fax: +971-488-62830

Asia Pacific
Singapore
Tel: +65-6512-5200
Fax: +65-6512-5233

smiths
bringing technology to life

If the products featured will be used in a potentially dangerous and/or hazardous process, your John Crane representative should be consulted prior to their selection and use. In the interest of continuous development, John Crane Companies reserve the right to alter designs and specifications without prior notice. ISO 9001, ISO 14001 Certified. Details available on request.

©2008 John Crane Print 07/08 www.metastreamcouplings.com

B-TMSeries/Eng