TYPE 1670-2/1670-3

Second Edition API 682 Category II and III Type B Sealol® Metal Bellows Seals

A – Bellows Assembly
B – Insert/Primary Ring
C – Mating Ring/Seat
D – O-Ring
E – Sleeve
F – Gland
G – Gland O-Ring
H – Segmented Bushing Assembly
I – Distributed Flush

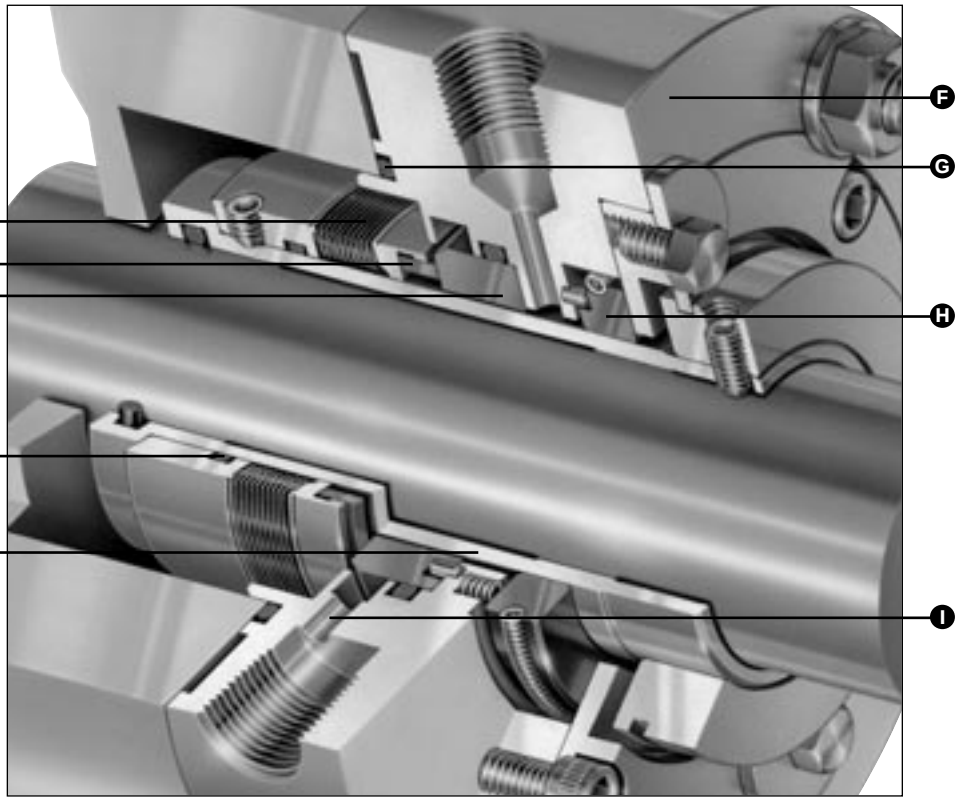

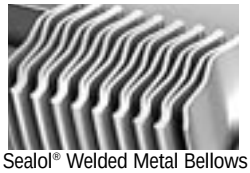

Sealol® Welded Metal Bellows

Type 1670-2/1670-3
(Category II or III with segmented Bushing and Distributed Flush Shown)

Product Description

- **Type 1670-2** - Category II, Type B, Arrangement 1 single rotating Alloy C-276 (UNS N10276) bellows cartridge seal. This seal is available with either a fixed, floating, or segmented bushing option with either a single point or distributed flush arrangement.
- **Type 1670-3** - Category III, Type B, Arrangement 1 single rotating Alloy C-276 bellows cartridge seal with segmented bushing and distributed flush arrangement standard. Category III seals come with the appropriate documentation in accordance with the API 682 specification.

Design Features

- API 682 Second Edition Qualification Tested
- Sealol Edge-Welded Metal Bellows
- Easy-To-Install Cartridge Design with Registered Fit
- Static Secondary Seals
- Standard Components
- Segmented Spring-Loaded Carbon Throttle Bushing for Effective Containment (Optional)
- Distributed flush optimizes circulation of liquid at faces and prevents trapped vapor.
- Available with a pumping ring when utilizing an API Plan 23.

Performance Capabilities

- Temperature:
  -75°C to 260°C/-100°F to 500°F
  (depending on material used)
- Pressure:
  Vacuum to 20 bar/300 psi
- Speed:
  up to 25 m/s / 5000 fpm
- Shaft Size:
  19mm to 95.25mm/0.750" to 3.750"

Typical Applications

- Hydrocarbons.
- Aromatic Fractionation Products (Benzene, Toluene, Solvents, etc.).
- Crude Oil Fractionation Products (Fuel Oil, Lubricating Oil, Gasoline, etc.).
- Chemicals, Caustics, Some Acids, Aqueous Solutions, Lubricating Liquids.

Sealol is a registered trademark of John Crane Inc.

TYPE 1670-2/1670-3

Second Edition API 682 Category II and III Type B Sealol® Metal Bellows Seals

Type 1670 API Type B Arrangement 1 - Single Cartridge

Type 1670 Standard Arrangement Shown (Category II Seal)

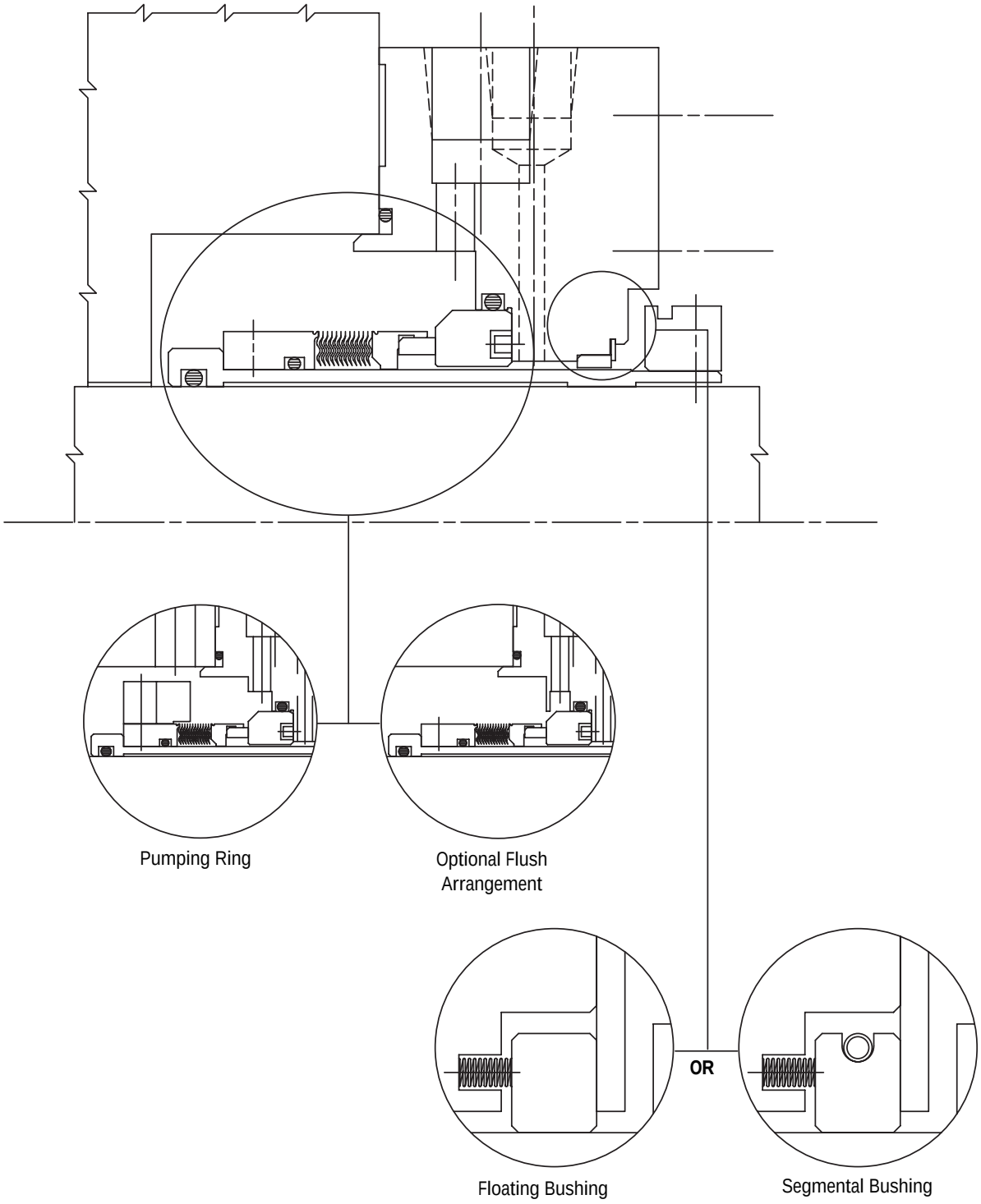

Optional Bushing Arrangements

TYPE 1670-2/1670-3

Second Edition API 682 Category II and III Type B Sealol® Metal Bellows Seals

Basic Pressure Rating

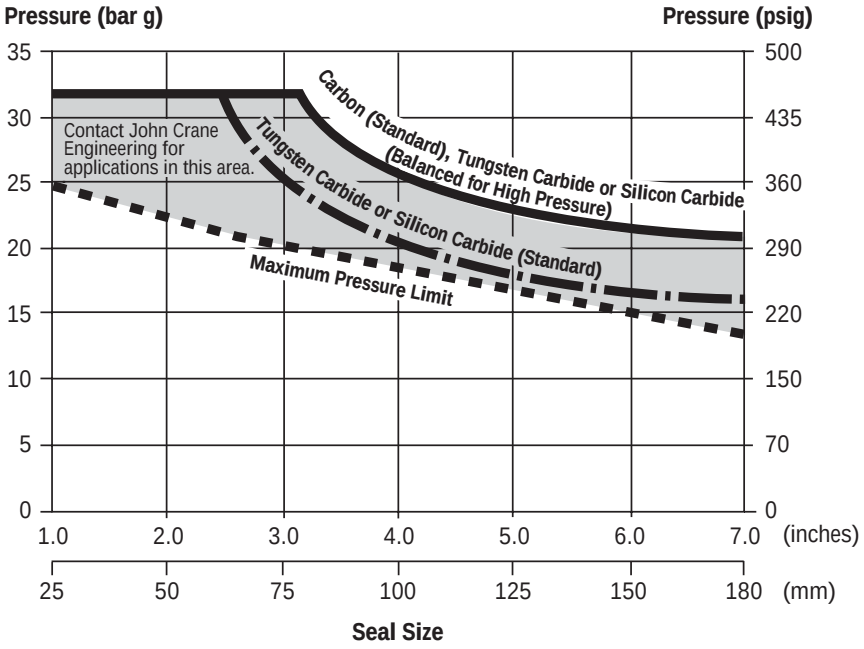

The Basic Pressure Rating is for a standard seal as shown in the typical arrangement, when installed according to the criteria given in this data sheet and generally accepted industrial practices.

The Basic Pressure Rating assumes stable operation at 3600 rpm in a clean, cool, lubricating, non-volatile liquid with an adequate flush rate. When used with the Multiplier Factors, the Basic Pressure Rating can be adjusted to provide a conservative estimate of the dynamic pressure rating.

For process services outside this range or for a more specific assessment of the dynamic pressure rating, contact John Crane Engineering.

NOTES:
1. Basic Pressure Rating Curve based on Single-Ply Bellows.
2. Basic Pressure Rating Curve is differential pressure applied to seal outside diameter.
3. Consult John Crane Engineering for applications outside these limits.

Multiplier Factors

	Selection Considerations	Multiplier Factors	
		Carbon vs. SiC	T/C vs. SiC
Speed	Up to 3600 rpm Above 3600 rpm	x 1.00 x (3600/speed)	x 1.00 x (3600/speed)
Sealed Fluid Lubricity	Petrol/Gasoline, Kerosene, or Better Water and Aqueous Solutions (<80°C/176°F) Flashing Hydrocarbons* (see note 1)	x 1.00 x 0.75 x 0.60	x 1.00 x 0.75 (see note 2)
Sealed Fluid Temperature (see note 3)	Up to 80°C/175°F Up to 120°C/250°F Up to 205°C/400°F	x 1.00 x 0.90 x 0.80	x 1.00 x 1.00 x 1.00

* The ratio of sealed pressure to vapor pressure must be greater than 1.5, otherwise consult John Crane. If the specific gravity is less than 0.6, consult John Crane.

NOTES:
1. Specific gravity ≥ 0.6 and ratio of sealed pressure to vapor pressure > 1.5.
2. More details regarding the fluid and the operating conditions are required.
3. Temperature at the seal faces includes effects of flush, quench and cooling.

Example for Determining Pressure Rating Limits:
Seal: Type 1670
Size: 50mm/2"
Product: 50/50 Glycol and Water
Face Material: Carbon vs. Silicon Carbide
Operating Temperature: 95°C/200°F
Operating Speed: 3600 rpm

Example for Determining Dynamic Pressure Rating:
The maximum pressure for a particular application is the lesser of the maximum pressure limit curve or the pressure calculated when the multiplier factors are applied to the specific seal face material curve.

Maximum Pressure Limit Curve:
21 bar g/300 psig max pressure
Carbon Limit Curve: 32 bar g/460 psig

Calculated Limit: 32 bar g/460 psig x 1.00 x 0.75 x 0.90 = 20 bar g/310 psig

At 3600 rpm with the service conditions noted, a 50mm/2" (Seal Size) Type 1670 has a maximum operating pressure limit of 20 bar g/310 psig.

TYPE 1670-2/1670-3

Second Edition API 682 Category II and III Type B Sealol® Metal Bellows Seals

Materials of Construction

SEAL COMPONENTS	MATERIALS	
Description	**Standard**	**Options**
Seat/Mating Ring	Silicon Carbide Reaction Bonded	—
Insert/Primary Ring	Premium Grade Carbon	Tungsten Carbide Nickel Bound
End Fittings	Alloy C-276 (UNS N10276)	—
Bellows	Alloy C-276 (UNS N10276)	—
Adaptive Hardware	316 Stainless Steel (UNS 31600)	—
Static Seals	Fluorocarbon	Amine Resistant Perfluoroelastomer Low-Temp Buna-N Perfluoroelastomer

Sealol Welded Metal Bellows

Design Features

- Optimum 45° Tilt Angle
- Three-Sweep Radius
- Nesting Ripple Plate Design
- Static Secondary Seal
- Light Spring Loads

Sealol Bellows Benefits

- Uniform Plate Rigidity and Stress Distribution
- Enhanced Fatigue Strength
- Pressure-Balanced by Design
- Less Heat
- Lower Power Consumption

Angular and Radial Movement

Excessive runout will have a detrimental effect on seal performance in the form of component wear or excessive leakage. API 682 limits runout as follows:

- Centering of the seal is to be by a register fit. The register fit surface shall be concentric to the shaft and have a total indicated runout (FIM) of not more than 0.005"/125 micrometers.
- Squareness of the seal chamber face to the shaft shall not exceed 0.0005" per inch of seal chamber bore (15 micrometers per cm).
- Runout of the sleeve outer diameter to the inner diameter shall be 0.001"/25 micrometers FIM.
- Shaft-to-sleeve diametrical clearance shall be to Tolerance Grade F7/h6.

Recommendations for Viscous Fluids

0 - 1,000 cSt: Standard Seal
1,000 - 3,500 cSt: Hard Face Material
3,500 - 10,500 cSt: Consult John Crane Engineering

NOTE: SSU (Saybolt Universal Seconds) approximately equals cSt (centistoke) x 4.6347
cP (centipoise) = cSt (centistoke) x specific gravity.

CUT LINE FOR SHORT PAGE

TYPE 1670-2/1670-3

Second Edition API 682 Category II and III Type B Sealol® Metal Bellows Seals

Piping Plans Recommended with the Type 1670-2/1670-3

API Plan 11

Recirculation from pump case through orifice to seal.

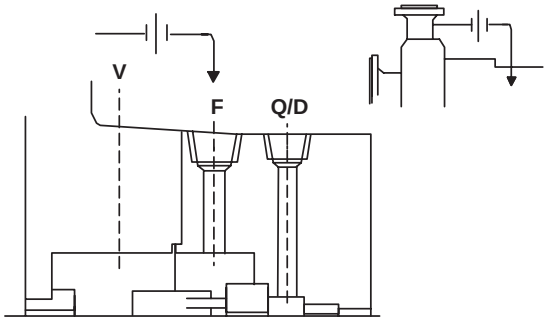

API Plan 32

Injection to seal from external source of clean cool fluid.

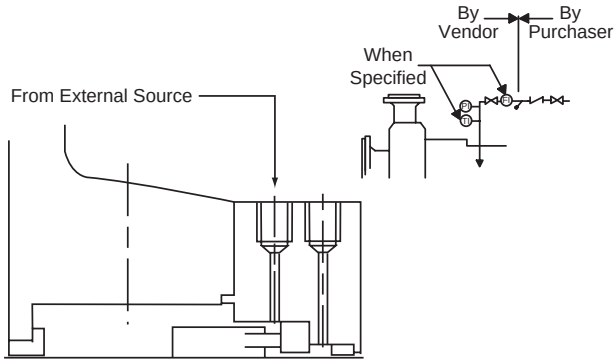

API Plan 21

Recirculation from pump case through orifice and cooler or heat exchanger to seal.

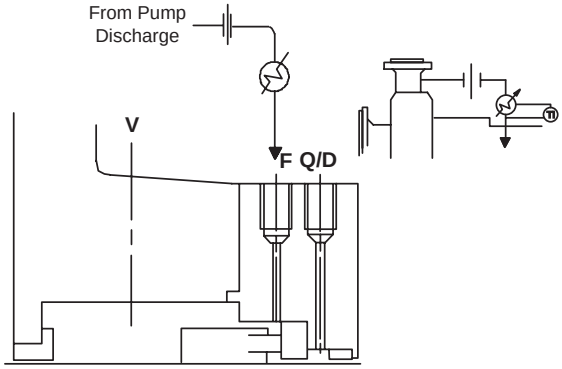

API Plan 62

External fluid quench (steam, gas, water, etc.) typically used with throttle bushing.

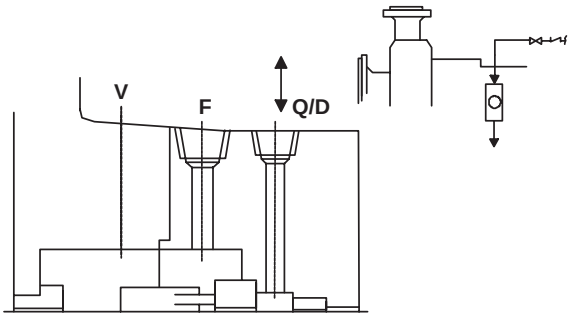

API Plan 23

Recirculation from seal with pumping ring through heat exchanger and back to seal.

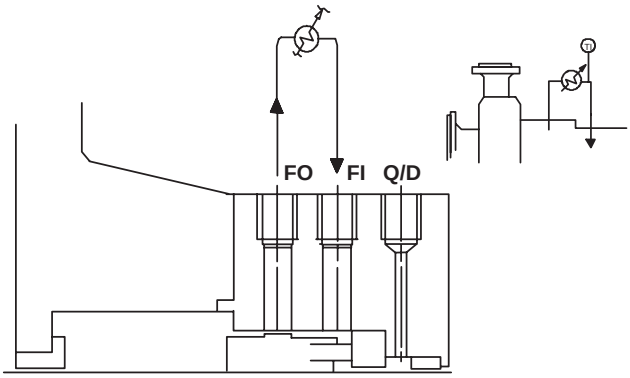

CUT LINE FOR SHORT PAGE

TYPE 1670-2/1670-3

Second Edition API 682 Category II and III Type B Sealol® Metal Bellows Seals

Europe
Slough, UK
Tel: 44-1753-224000
Fax: 44-1753-224224

Latin America
São Paulo, Brazil
Tel: 55-11-3371-2500
Fax: 55-11-3371-2599

Middle East, Africa, Asia
Dubai, United Arab Emirates
Tel: 971-4-3438940
Fax: 971-4-3438970

North America
Morton Grove, Illinois USA
1-800-SEALING
Tel: 1-847-967-2400
Fax: 1-847-967-3915

smiths
A part of Smiths Group plc

For your nearest John Crane facility, please contact one of the locations above.

If the products featured will be used in a potentially dangerous and/or hazardous process, your John Crane representative should be consulted prior to their selection and use. In the interest of continuous development, John Crane Companies reserve the right to alter designs and specifications without prior notice. It is dangerous to smoke while handling products made from PTFE. Old and new PTFE products must not be incinerated.

©2002 John Crane Print 10/02