Type CPLR & CPAT

METASTREAM® C-Series Rigid Couplings

A – Motor hub and split ring to NEMA standard

B – Variable length spacer

C – Externally adjustable shaft nut

D – Pilot fits insure repeatable concentric installation

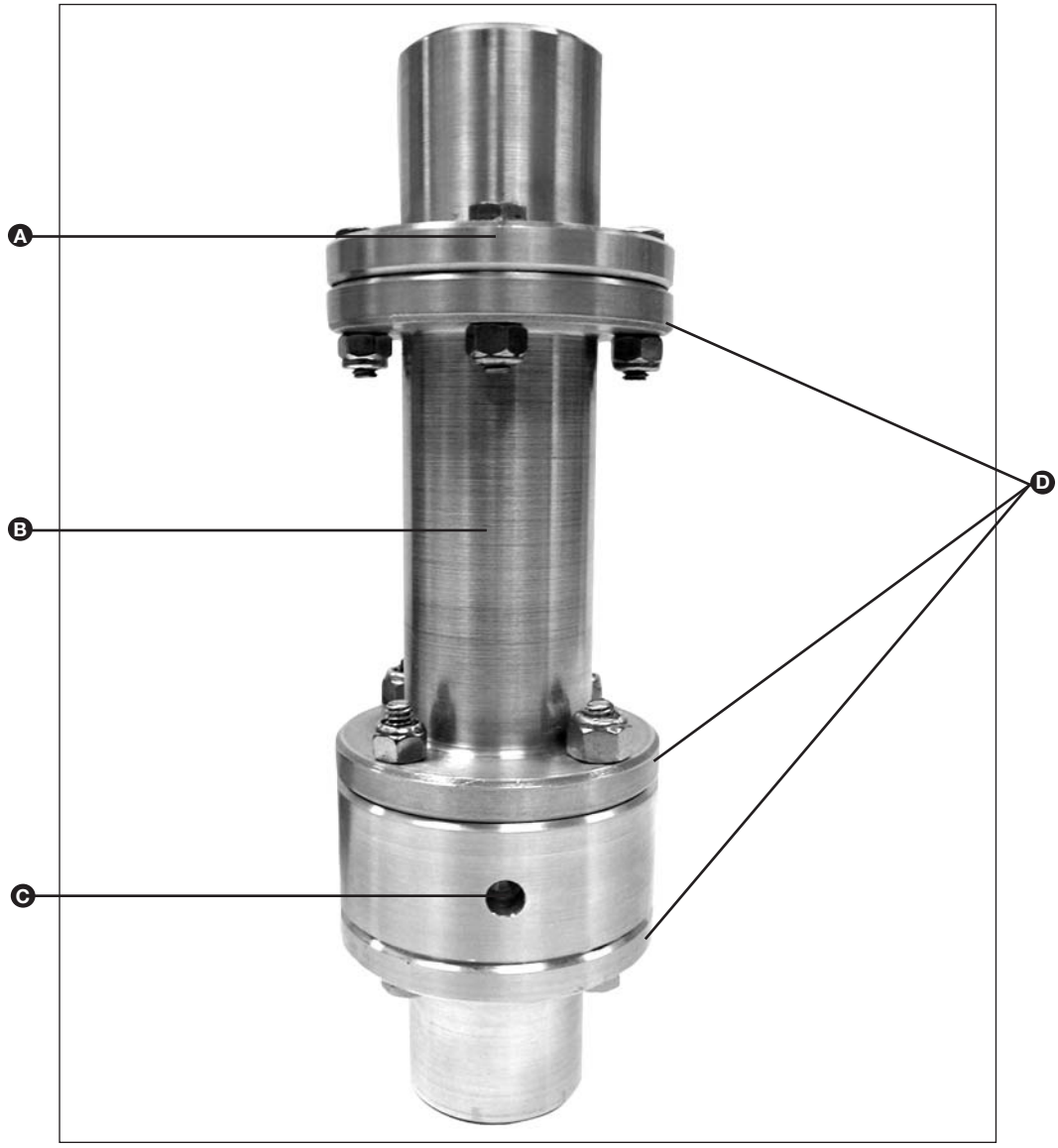

Product Description

Metastream® C-Series Couplings incorporate a segmented, piloted locating design. This eliminates the shaft distortion associated with conventional 'clam shell' coupling designs. The CPLR is for industrial applications and the CPAT is for higher speed applications:

- Easily adjustable for setting vertical clearance.
- Infinite life.
- Corrosion-resistant phosphate coating on AISI 1040 steel.
- Robust design.

Design Features

- Designed to transmit torque between vertical mounted equipment including:
  - Vertical Pumps.
  - Vertical Turbines.
  - Vertical Mixers.
- CPAT meets requirements of API 610 8th Edition.
- Optional materials & coatings available.
- Electrically insulated design available.

Metastream is a registered trademark of John Crane Inc.

Type CPLR & CPAT

METASTREAM® C-Series Rigid Couplings

Dimensions and Technical Data

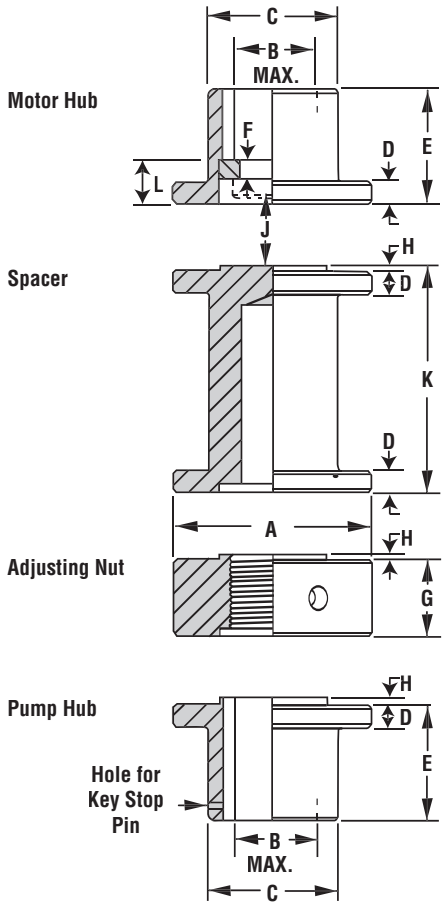

Coupling Size	HP/100 RPM	Trust CAP.-LB	Fit NEMA Frame	Bolts Per FLG	Bolt DIA.	A	B	C	D	E	F	G	H	J	K STD	K MIN	L
1125	2.7	4500	182-215	4	1/4	3.00	1.125	1.75	0.38	2.00	0.375	1.25	0.125	0.016	4.44	1.63	0.89
1625	8.0	11000	254-326	6	5/16	4.00	1.625	2.50	0.44	2.25	0.375	1.50	0.125	0.016	4.44	1.75	0.89
2125	17.9	28500	364-445	6	1/2	5.13	2.125	3.13	0.63	2.69	0.375	1.75	0.125	0.016	4.44	2.63	0.89
2625	33.8	28500	No std	6	1/2	5.88	2.625	3.88	0.63	2.94	*	3.50	0.125	0.016	4.44	2.63	0.89
2875	44.4	28500	No std	6	1/2	6.38	2.875	4.38	0.75	3.44	*	3.50	0.125	0.016	4.44	2.88	0.89
3125	57.0	38000	No std	8	1/2	6.75	3.125	4.63	0.75	4.00	*	3.50	0.125	0.016	4.44	2.88	0.89
3875	109	66000	No std	6	3/4	8.94	3.875	5.88	0.81	4.38	*	4.00	0.125	0.016	4.44	3.13	0.89
5000	310	159000	No std	8	1	11.75	5,000	7.50	1.00	6.00	*	3.00	0.250	0.125	No std	4.50	1.38
6000	404	199000	No std	10	1	13.25	6,000	9.00	1.13	9.25	0.625	2.38	0.250	0.125	No std	4.75	1.63
7250	712	278000	No std	14	1	15.00	7.250	10.75	2.25	10.75	0.750	3.69	0.313	0.125	No std	7.06	1.94
8500	1148	294000	No std	12	1-1/8	17.25	8.500	12.50	2.25	15.00	0.750	3.56	0.313	0.125	No std	7.31	1.94
10500	2164	352000	No std	12	1-1/8	20.50	10.500	15.00	2.75	18.38	0.750	4.19	0.313	0.125	No std	8.31	1.94

Notes:

1. Driver hub bores are in 0.25" increments from 0.875" to and including 3.875" then any diameter up to 10.500". Standard bores are to AGMA 9002 Class 2 clearance and keyways to AGMA 9002 commercial tolerance for both driver and driven hubs.
2. John Crane Flexibox does not furnish the key stop pin.
3. 3/8 or 1/2 inch thick split rings are standard options on sizes 2625 thru 3875 and 1/2 or 3/4 inch on size 5000.
4. Adjusting nuts can be supplied blank or threaded. Standard threads are ANSI UN Class 2B, left or right hand.
5. NEMA frame sizes apply to VP and HP series.

Table refers to Standard Range. Modified designs to meet specific customer requirements are available.

Type CPLR & CPAT

METASTREAM® C-Series Rigid Couplings

Configurations

Style 1
Non-spacer style provides easy assembly on driver and rotating driven equipment shafts. Usually used on equipment where there is a minimum of distance between shaft ends.

Style 2
Non-spacer style with an adjusting nut so that vertical clearances in the driven equipment may be attained. Usually used on equipment where there is a minimum of distance between shaft ends.

Style 3
Spacer Coupling style offers a spacer whereby the driven equipment may be worked on without the disassembly or removal of the driver.

Style 4
Spacer Type Rigid Coupling offers a removable spacer for easy maintenance of driven equipment and an adjusting nut assembly, whereby the vertical clearance in the driven equipment may be attained.

Style 1

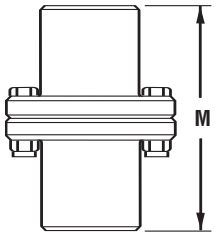

Style 2

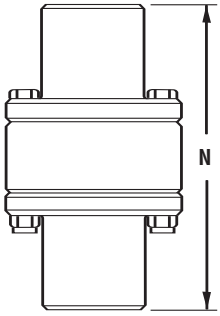

Style 3

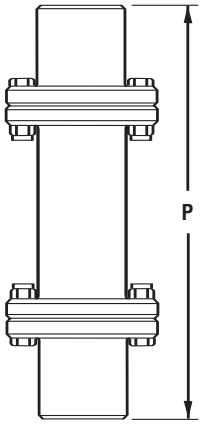

Style 4

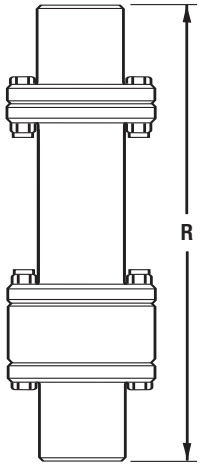

Coupling Size	M	N	P		R	
			STD	MIN	STD	MIN
1125	4.00	5.25	8.31	5.50	9.56	6.75
1625	4.50	6.00	8.81	6.13	10.31	7.63
2125	5.38	7.13	9.69	7.88	11.44	9.63
2625	5.88	9.38	10.19	8.38	13.69	11.88
2875	6.88	10.38	11.19	9.63	14.69	13.13
3125	8.00	11.50	12.31	10.75	15.81	14.25
3875	8.76	12.75	13.07	11.76	17.06	15.75
5000	12.00	15.00	No std	16.50	No std	19.50
6000	18.50	20.88	No std	23.00	No std	25.38
7250	21.50	25.19	No std	28.25	No std	31.94
8500	30.00	33.56	No std	37.00	No std	37.00
10500	36.76	40.94	No std	44.76	No std	48.94

Type CPLR & CPAT

METASTREAM® C-Series Rigid Couplings

Selection Procedure

Step 1
Determine the shaft diameter of the driver and compare to the maximum sized hub bore in column B of the dimensions shown on page 2. If the driver is a standard Nema HP or VP series motor, use the column marked 'Fit Nema Frame' to determine the coupling size required.

Step 2
Determine the shaft diameter of the driven equipment and compare to the maximum sized hub bore in column B of the dimensions shown on page 2. The shaft size of the driven equipment should not exceed the maximum bore size to determine the coupling size.

Step 3
The largest size shaft of either the driver or driven equipment will determine the ultimate coupling size.

Step 4
Specify the coupling configuration and type, bore size for the driver and driven equipment hubs, type of fit, and adjusting nut thread details.

Step 5
Select type CPLR for standard coupling tolerances or type CPAT for API 610 8th edition tolerances.

Balance Recommendations

As supplied, standard CPLR and CPAT couplings meet AGMA Balance Class 8 with clearance fit bores. The standard CPAT coupling meets AGMA Balance Class 9 with transition/interference fit bores. While dynamic balancing is not normally required, if specified, John Crane Flexibox recommends component balancing. Any potential benefits of assembly balancing are negated by the installation fits and adjustable nature of the application. Contact John Crane Flexibox if your application warrants balancing consideration.

Europe
Slough, UK
Tel: 44-1753-224000
Fax: 44-1753-224224

North America
Houston
Tel: 1-713-944-6690
Fax: 1-713-946-8252

Latin America
São Paulo, Brazil
Tel: 55-11-3371-2500
Fax: 55-11-3371-2599

Middle East & Africa
Dubai, United Arab Emirates
Tel: 971-4-3438940
Fax: 971-4-3438970

Asia
Singapore
Tel: 65-6512-5200
Fax: 65-6512-5233

For your nearest John Crane facility, please contact one of the locations above.

If the products featured will be used in a potentially dangerous and/or hazardous process, your John Crane representative should be consulted prior to their selection and use.
In the interest of continuous development, John Crane Companies reserve the right to alter designs and specifications without prior notice.

©2006 John Crane Print 09/06 **www.johncrane.com** ISO 9001, ISO 14001, ISO/TS 16949 Certified. Details available on request. S-**CPLR/CPAT/Eng**

smiths