Heavy Duty Cartridge Seals

SB1, SBW and SB2

smiths
bringing technology to life

SAFEMATIC®

Safeseal SB1

Versatile seal for clean fluids and lubricants

Typical applications

Safeseal SB1 is a single cartridge seal for use with clean fluids and lubricants: e.g., water, oil, solvents, and pulp (consistency ≤2%). Generally it is used in pumps in the pulp & paper industry, as well as in power plants. The SB1 cartridge seal fits in various pumps as well as in other processing equipment.

The SB1 seal is versatile, easy to install and maintain. Although the design of the seal is simple, it contains advanced technical features such as patented seal face holders and an elastic thrust ring.

Features

The balanced cartridge design makes the SB1 seal applicable for a wide range of demanding conditions.

1. **Balanced construction**
   Sudden changes in pressure do not affect seal function.
2. **Springs are located in the stationary part of the seal**
   Shaft misalignment will not vibrate the springs or wear out the O-rings.
3. **SiC/carbon faces are standard**
   Ideal for the high speeds found in condensate and high pressure pumps.
4. **Cartridge design**
   Easy to install, reducing possibilities of human error. No measurements necessary for installation.
5. **No drive pins in contact with faces**
   No face cracking during start-up.
6. **Available in different materials**
   Selection covers all single seal applications.

Technical specifications

Stuffing box pressure	max. 15 bar (215 psi)
Speed	max. 20 m/s (65 ft/s)
Temperature	max. 120 °C (250 °F)

Materials

Seal faces	SiC/Carbon SiC/SiC
O-rings	PTFE EPDM Viton®
Metals	AISI 329 standard, Titanium, Hastelloy, UHB
Springs	Nimonic steel

Standard seal
SB1-ØD2-GREO

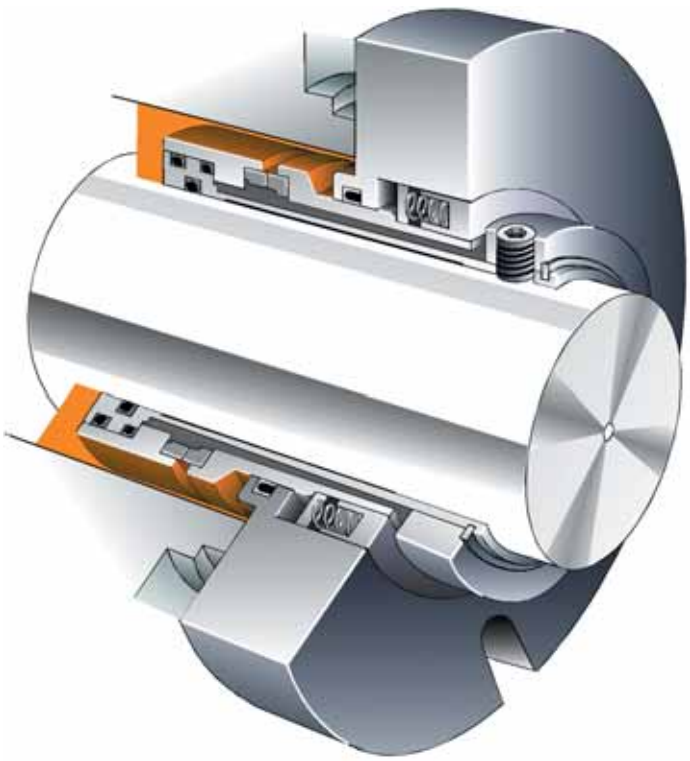

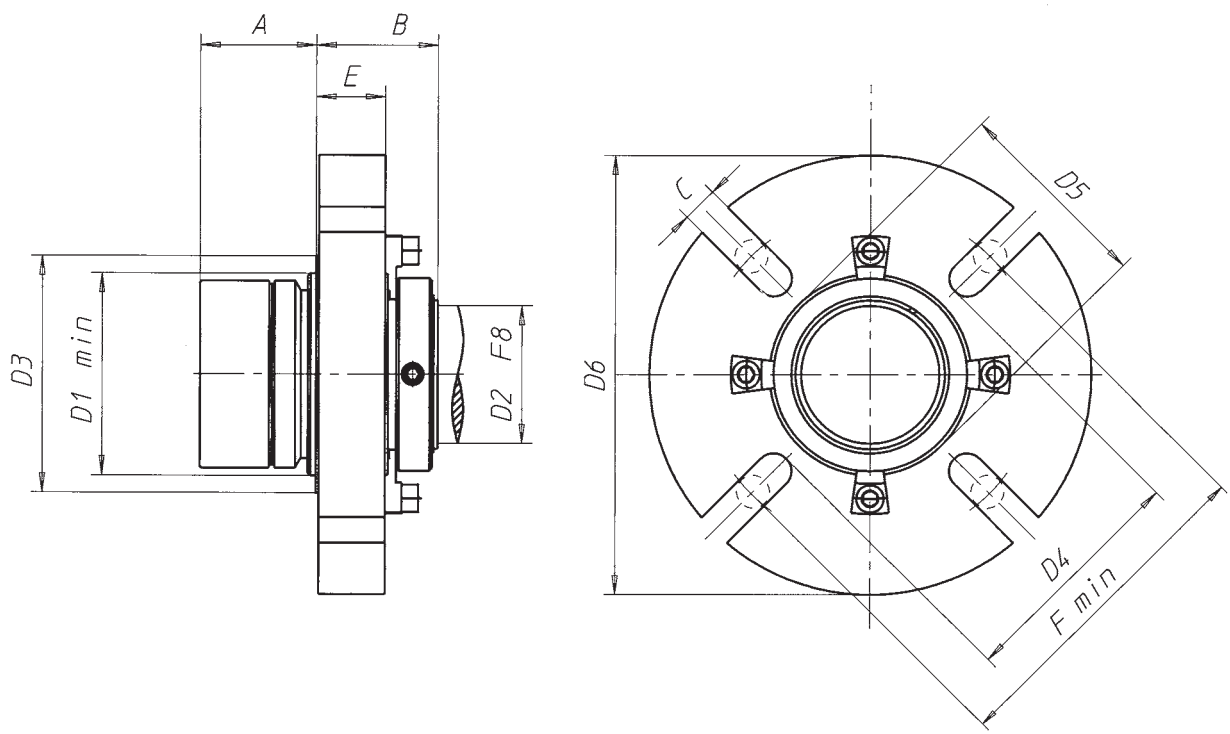

SB1 Dimensions (mm)

Seal Size D2	A	B	C	E	D1	D3	D4	F min	D5	D6
35	42	44	13	25	51	67	67	79	55	130
38	42	44	13	25	58	75	75	86	65	130
40	42	44	13.5	25	60	76	76	90	66	130
43	42	44	13.5	25	65	78	78	90	70	150
45	42	44	13	25	65	81	81	93	68	145
48	42	44	13	25	68	84	84	100	73	150
50	42	44	13	25	70	86	86	98	73	160
53	42	44	13	25	75	91	91	103	80	160
55	42	44	13	25	75	91	91	103	80	160
58	42	44	13	25	83	97	97	109	85	160
60	42	44	13	25	85	97	97	109	87	160
63	47	51	17	30	90	100	100	112	92	180
65	47	51	17	30	90	105	105	121	92	180
68	47	51	17	30	95	112	112	127	95	180
70	47	51	17	30	95	112	112	155	99	200
75	54	51	17	30	104	115	115	132	106	200
80	54	51	17	30	109	122	122	138	111	210
85	54	51	17	30	114	127	127	158	116	220
90	54	51	17	30	124	132	132	165	117	220
95	54	51	17	30	124	138	138	165	126	220
100	54	51	17	30	129	148	148	165	131	220
105	54	51	17	30	135	160	160	175	134	220

Safeseal SBW

Reliable quench seal

Typical applications

Safeseal SBW is a single seal cartridge used in the quench (unpressurised) wash. The SBW seal can be used in many industrial process pumps. The design ensures reliable performance and longevity under demanding conditions. Typical, applications include pulp pumps in the pulp & paper industry and in high temperature condensate pumps. The SBW cartridge seal fits other processing equipment in addition to pumps.

Features

Balanced cartridge design makes the SBW seal ideal for a wide range of applications under demanding conditions.

1. **Balanced design**
   Sudden changes in pressure do not affect seal function.
2. **Springs are located in the stationary part of the seal, in the seal water**
   Shaft misalignment will not vibrate the springs or wear out the O-rings. The seal water washes the springs.
3. **Cartridge design**
   No measurements necessary for installation, easy to install, reducing possibilities of human error.
4. **No drive pins in contact with faces**
   No face cracking during start-up.
5. **Available in different materials**
   Selection covers all single seal applications.
6. **Unpressurised water quench**
   At high temperatures, the seal is cooled with an unpressurised (quench) wash. A V-ring prevents wash water leakage.

Safeunit™

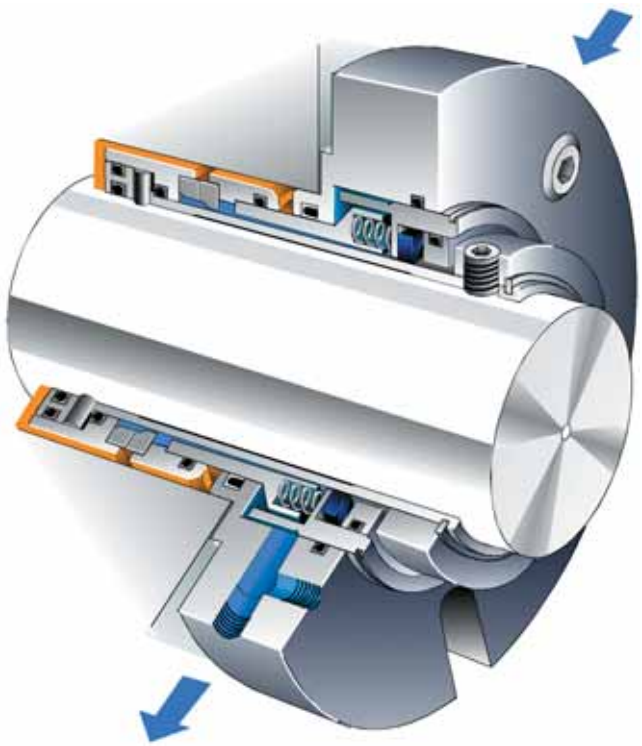

Technical specifications	
Stuffing box pressure	max. 15 bar (215 psi)
Seal water pressure	max. 0.5 bar (7 psi)
Speed	max. 20 m/s (65 ft/s)
Temperature	max. 150 °C (300 °F)
Materials	
Faces	SiC/Carbon SiC/SiC
O-rings	PTFE EPDM Viton®
Metals	AISI 329 standard, Titanium, Hastelloy, UHB
Springs	Nimonic steel.
Standard seal	
SBW-ØD2-QREV	

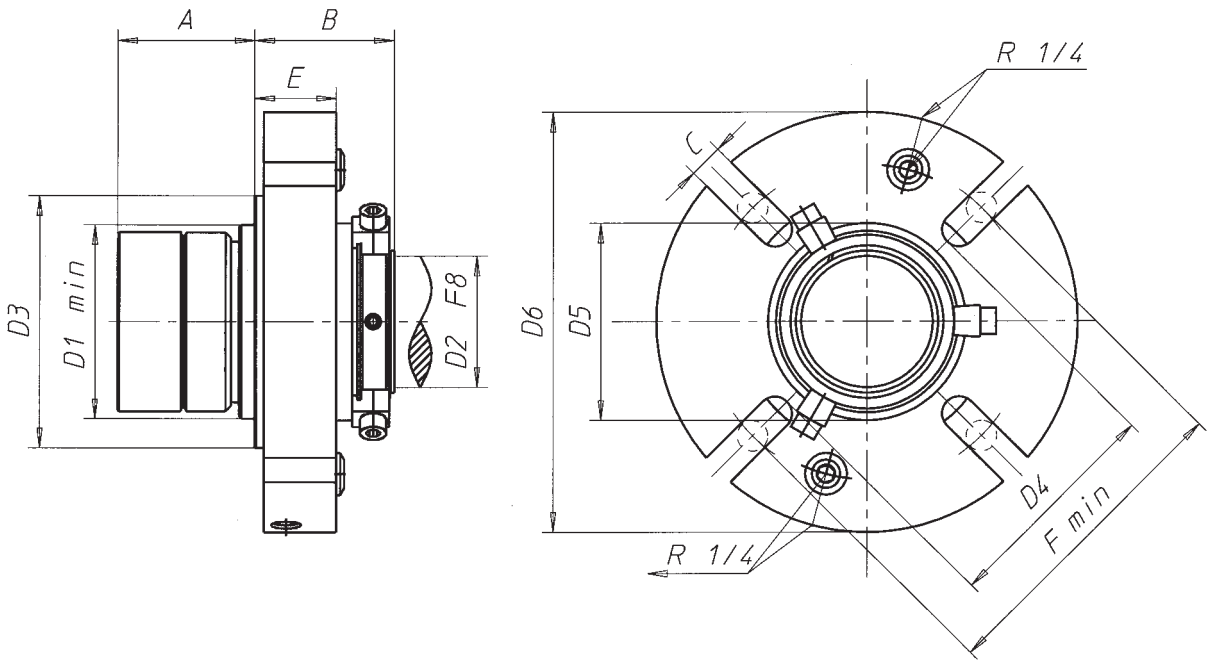

SBW Dimensions (mm)

Seal Size D2	A	B	C	E	D1	D3	D4	F	D5	D6
35	52	49	13	30	55	79	70	91	61	130
38	52	52	13	30	58	84	73	98	65	130
40	52	52	13	30	60	86	75	98	66	130
43	52	52	13	30	65	93	80	101	70	140
45	52	52	13	30	65	93	80	105	70	140
48	52	53	13	30	68	93	83	105	73	140
50	52	53	13	31	70	99	86	111	75	160
53	52	53	13	31	75	99	90	111	80	160
55	52	53	13	31	75	99	90	111	80	160
58	52	53	13	31	83	99	94	111	85	160
60	52	53	13	31	85	111	98	123	87	160
63	54	60	17	35	90	116	102	127	92	160
65	54	60	17	35	90	116	102	127	92	160
68	54	60	17	35	95	139	112	127	95	210
70	54	60	17	35	95	139	112	155	99	210
75	62	65	17	35	104	139	117	155	106	210
80	62	65	17	35	109	139	123	155	111	210
85	62	65	17	35	114	149	134	165	116	210
90	62	65	17	35	119	149	136	165	121	210
95	62	65	17	35	124	149	140	165	126	210
100	62	65	17	35	129	159	145	175	131	210
105	62	65	17	35	135	169	150	175	136	220

Safeseal SB2

Double-balanced cartridge seal designed for the toughest conditions

Typical applications

Safeseal SB2 is a dual cartridge seal. Its double-balanced design ensures the reliability and longevity of the seal in the most demanding conditions. The SB2 seal is ideal for use with environmentally hazardous and abrasive fluids, most often used in pumps in pulp mill area for cooking, evaporation and causticising. The SB2 seal is also compatible with other kinds of pumps and process equipment including agitators.

Features

1. **A patented heat process fastens the seal faces ensuring correct, distortion-free face**
   Alignment at all recommended temperatures.
2. **The springs are located in the stationary body of the seal, in the seal water**
   The seal water washes the springs, preventing process chemical corrosion and reduces chance of the springs getting blocked or jammed. Shaft misalignment does not vibrate or wear out the O-rings.
3. **The piston design permits free axial movement**
   It allows ± 2 mm axial movement. Impeller adjustments do not affect face load or spring force.
4. **PTFE slot rings**
   PTFE slot rings replace the traditional O-rings in places where they are exposed to the product, preventing sticking.
5. **Protected faces**
   The seal face carriers are driven by machined fits, preventing metal stress from distorting the face.
6. **Patented double-balanced design**
   Allows the use of both pressurised and unpressurised water and prevents face overload.

Safeunit™

2-15 bar
0.5-3 l/min

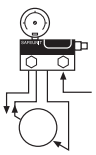

Technical specifications	
Stuffing box pressure	max. 15 bar (215 psi)
Seal pressure	max. 15 bar (215 psi)
Velocity	max. 20 m/s (65 ft/s)
Temperature	max. 180 °C (350 °F)
Materials	
Faces	SiC/Carbon SiC/SiC
O-rings	PTFE EPDM Viton®
Metals	AISI 329 and 316 standard, Titanium, Hastelloy, UHB
Springs	Nimonic steel
Standard seal	
SB2-ØD2-QRMN	

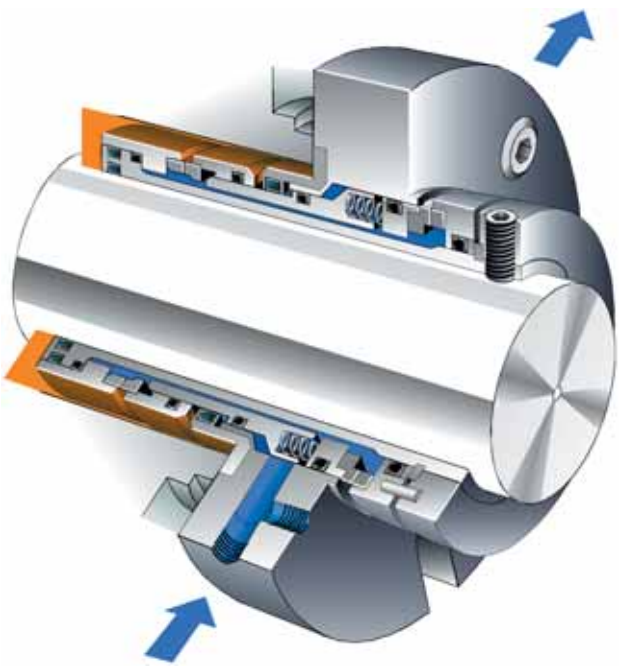

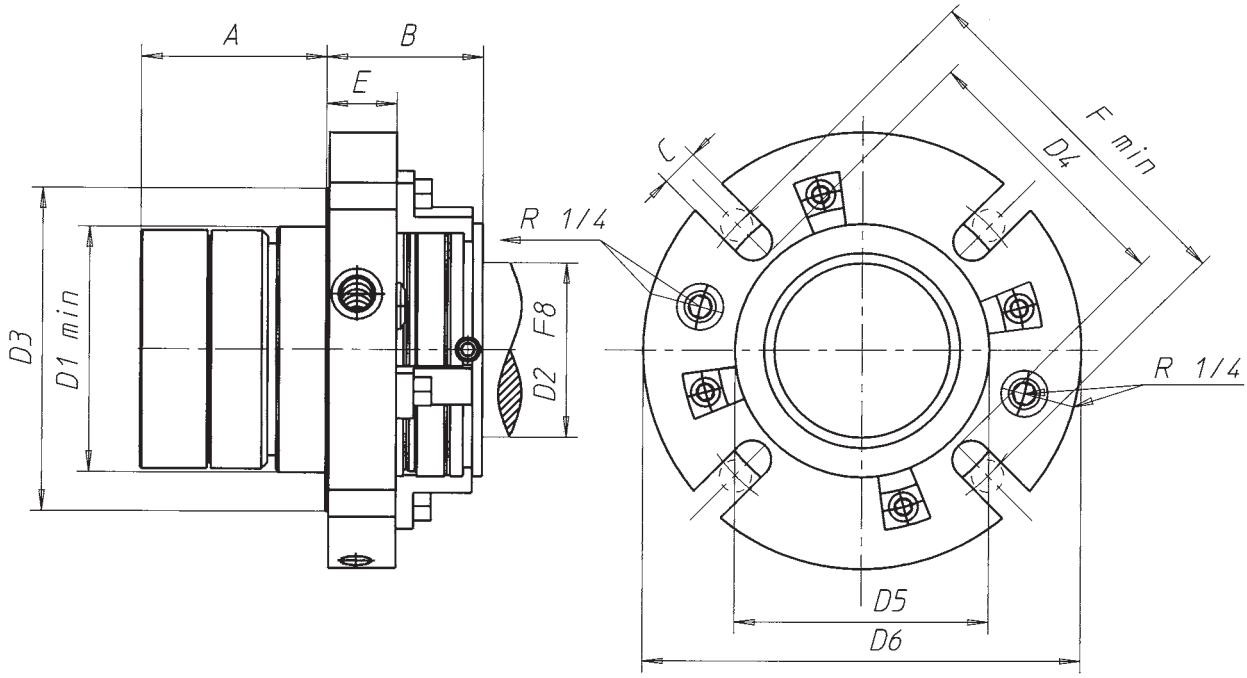

SB2 Dimensions (mm)

Seal Size D2	A	B	C	E	D1	D3	D4	F	D5	D6
35	57	49	13	20	58	79	68	91	62	130
38	59	52	13	23	62	86	72	98	66	130
40	59	52	13	23	62	86	72	98	66	130
43	59	52	13	23	67	89	77	101	70	130,150*
45	59	52	13	23	69	93	79	105	75	130,150*
48	60	53	13	23	72	93	82	105	75	140,150*
50	60	53	13,17	23	74	99	84	111/115	77	140,170*
53	60	53	13	24	76	99	86	111	80	140,170*
55	64	53	13,17	24	79	99	89	111/115	82	150,170*
58	64	53	13	24	83	99	93	111	84	150
60	64	53	13,17	24	85	111	95	123/127	87	150,170*
63	72	60	17	25	90	111	99	127	90	160
65	72	60	17	25	93	111	102	127	92	160,170*
68	72	60	17	25	95	111	104	127	95	170
70	72	60	17	25	95	139	105	155	98	170,220*
80	74	65	17	29	109	139	118	155	111	200,220*
85	78	70	17	30	114	149	123	165	111	200,220*
90	78	70	17	30	119	149	128	165	120	200,220*
95	78	70	17	30	125	149	134	165	125	200
100	76	76	17	34	129	159	138	175	131	220
105	76	76	17	34	135	169	144	175	134	220
110	76	76	17	34	140	169	149	175	139	230
115	76	76	17	34	150	179	160	185	150	230
120	76	76	17	34	157	188	170	194	158	245
125	76	76	17	34	160	189	175	194	170	270
130	84	86	17	36	166	194	180	210	174	280
135	84	86	17	36	172	199	185	215	179	280
140	84	86	17	36	178	206	192	222	187	280

*Standard and extra large flange sizes

This seal is the most technically advanced seal on the market.
Combined with the SAFEUNIT™ control and monitoring systems, it guarantees long and trouble-free use.

Mechanical Sealing Systems

With SB seals you can standardise your seal inventory and reduce the amount of capital.

SB Seal Identification Codes

E.g. SB2-50-QRMG-302197

XXX-XX-$X_1X_2X_3X_4$-XXXXXX

(1) (2) (3) (4)

(1) Type of seal SB1: single seal
SBW: single seal with quench
SB2: double seal

(2) Shaft diameter: (mm, in)

(3) Material codes

X_1	X_2	X_3	X_4
Q-SiC/SiC	R-AISI 316/329	M-PTFE	N-TC/carbon
G-SiC/carbon	T-titanium	E-EPDM	G-SiC/carbon
T-TC/TC	U-UHB 904 L	V-Viton®	V- V-ring
			O-single seal

(4) Drawing number

John Crane has a comprehensive network of highly trained representatives, distributors and installation and maintenance personnel. Contact your local John Crane sales office for more information.

For your nearest John Crane facility, please contact one of the locations below.

John Crane Safematic Oy
Muurame, Finland
Tel: +358-10-8525-611
Fax: +358-10-8525-600

Europe
Slough, UK
Tel: +44-1753-224000
Fax: +44-1753-224224

North America
Morton Grove
Tel: +1-847-967-2400
Fax: +1-847-967-3915

Latin America
São Paulo, Brazil
Tel: +55-11-3371-2500
Fax: +55-11-3371-2599

Middle East & Africa
Dubai, United Arab Emirates
Tel: +971-481-27800
Fax: +971-488-62830

Asia Pacific
Singapore
Tel: +65-6512-5200
Fax: +65-6512-5233

smiths
bringing technology to life

If the products featured will be used in a potentially dangerous and/or hazardous process, your John Crane representative should be consulted prior to their selection and use. In the interest of continuous development, John Crane Companies reserve the right to alter designs and specifications without prior notice. ISO 9001, ISO 14001, ISO/TS 16949 Certified. Details available on request.

©2009 John Crane Print 08/09 **www.johncrane.com**

B-SB1/SBW/SB2/Eng