TYPE 8600

High Performance Seal

A – LaserFace Mating Ring
B – Armoured Composite Ring (ACR)
C – Carrier
D – Elastomeric Support Ring (ESR)
E – Polymer Secondary Seal
F – Spring
G – Cranite Primary Ring
H – Thrust Ring
I – Pumping Scroll

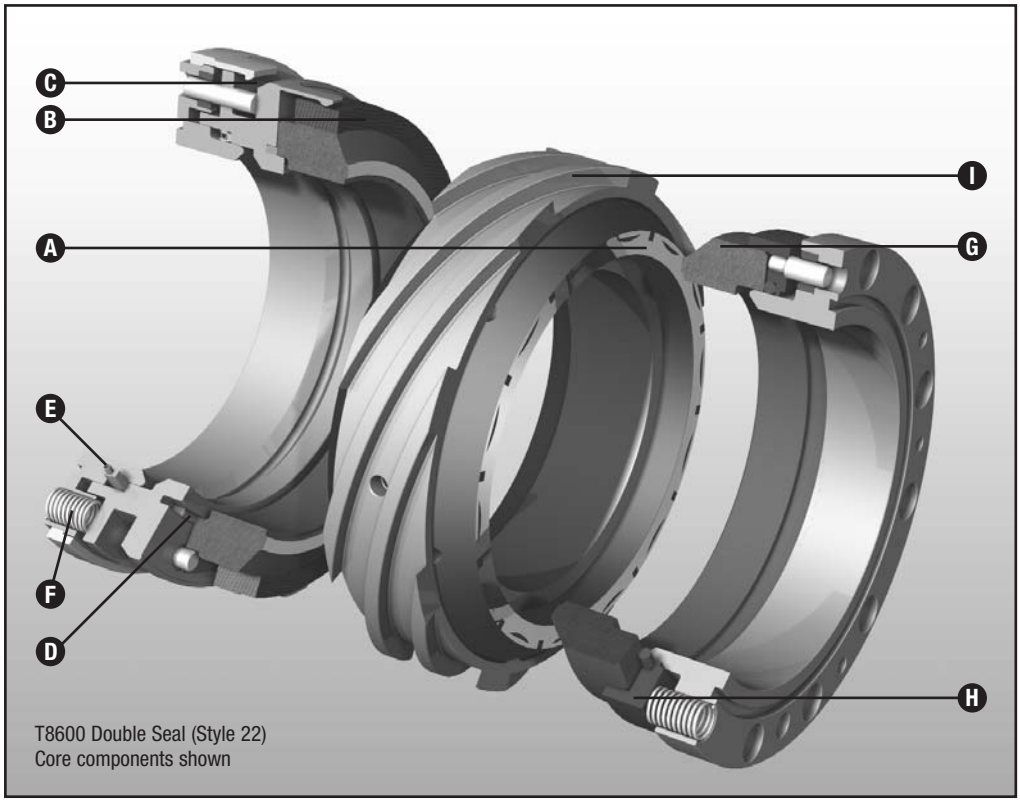

T8600 Double Seal (Style 22)
Core components shown

Product Description

The T 8600 High Duty Seal range, available in single and dual arrangements, is designed for the highest pressures and speeds.

- Ideally suited for offshore, pipeline and injection duties
- Stationary, multi-spring design ensures optimum operation across the speed range
- Complies with API 610 and can be supplied to other international standards such as NACE MR-01-075.

Performance Capabilities

Temperature: -40°C to 300°C

Pressure: Vacuum to 200 bar G

Speed: Up to 50 m/s

Design Features

- Available in Single, Double, Tandem, Dry Tandem and Pressurised Tandem seal designs
- Advanced composite face materials
- FEA optimised seal faces, with LaserFace Technology as standard on Double pressurised seals
- Unique carbon-fibre reinforcement option (ACR) for high reverse pressure capability
- Hang-up resistant polymer secondary seals
- ESR seal face support, used to achieve stable face presentation

LaserFace™

TYPE 8600

TYPE 8600

High Performance Seal

8610 - Single Seal - Dimensional Data

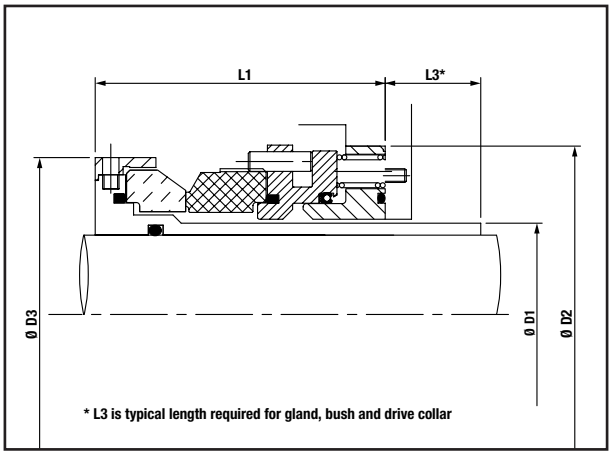

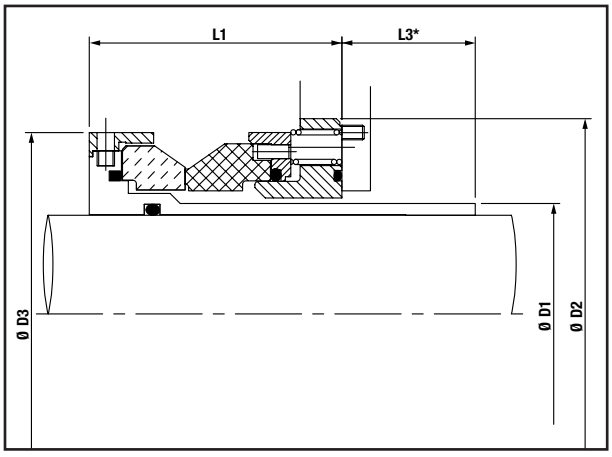

Styles 01, 03

See page 4 for style definition

Size Code	D1 mm	D2 mm	D3 mm	L1 mm	L3 min mm
0412	41.2	81.0	75.0	73.8	35
0444	44.4	84.0	78.0	73.8	35
0476	47.6	87.5	81.0	73.8	35
0508	50.8	90.5	84.6	73.8	35
0539	53.9	93.5	88.0	79.3	35
0571	57.1	97.0	91.0	79.3	35
0603	60.3	100.0	94.6	79.3	35
0635	63.5	103.0	97.6	79.3	35
0666	66.6	106.5	100.6	79.3	35
0698	69.8	115.5	109.0	85.8	35
0762	76.2	122.0	115.6	85.8	35
0825	82.5	128.5	122.0	85.8	35
0889	88.9	135.0	128.0	85.8	35
0952	95.2	141.0	136.0	90.3	45
1016	101.6	147.5	142.6	90.3	45
1079	107.9	154.0	148.6	90.3	45
1143	114.3	160.0	155.0	90.3	45
1206	120.6	178.0	172.0	102.8	45
1270	127.0	184.0	178.6	102.8	45
1333	133.3	190.5	185.0	102.8	45
1397	139.7	197.0	191.6	102.8	45
1460	146.0	203.5	197.6	102.8	45
1524	152.4	209.5	204.0	102.8	45
1587	158.7	216.0	210.6	102.8	45
1619	161.9	226.0	223.6	117.8	55
1682	168.2	232.5	230.0	117.8	55
1746	174.6	239.0	236.6	117.8	55
1809	180.9	245.0	242.6	117.8	55
1873	187.3	251.5	249.0	117.8	55
1936	193.6	258.0	255.6	117.8	55
2000	200.0	264.5	262.0	117.8	55
2063	206.3	270.5	268.0	117.8	55

Styles 02, 04, 05

Size Code	D1 mm	D2 mm	D3 mm	L1 mm	L3 min mm
0412	41.2	81.0	75.0	57.8	35
0444	44.4	84.0	78.0	57.8	35
0476	47.6	87.5	81.0	57.8	35
0508	50.8	90.5	84.6	57.8	35
0539	53.9	93.5	88.0	63.3	35
0571	57.1	97.0	91.0	63.3	35
0603	60.3	100.0	94.6	63.3	35
0635	63.5	103.0	97.6	63.3	35
0666	66.6	106.5	100.6	63.3	35
0698	69.8	115.5	109.0	68.8	35
0762	76.2	122.0	115.6	68.8	35
0825	82.5	128.5	122.0	68.8	35
0889	88.9	135.0	128.0	68.8	35
0952	95.2	141.0	136.0	73.3	45
1016	101.6	147.5	142.6	73.3	45
1079	107.9	154.0	148.6	73.3	45
1143	114.3	160.0	155.0	73.3	45
1206	120.6	178.0	172.0	84.8	45
1270	127.0	184.0	178.6	84.8	45
1333	133.3	190.5	185.0	84.8	45
1397	139.7	197.0	191.6	84.8	45
1460	146.0	203.5	197.6	84.8	45
1524	152.4	209.5	204.0	84.8	45
1587	158.7	216.0	210.6	84.8	45
1619	161.9	226.0	223.6	97.8	55
1682	168.2	232.5	230.0	97.8	55
1746	174.6	239.0	236.6	97.8	55
1809	180.9	245.0	242.6	97.8	55
1873	187.3	251.5	249.0	97.8	55
1936	193.6	258.0	255.6	97.8	55
2000	200.0	264.5	262.0	97.8	55
2063	206.3	270.5	268.0	97.8	55

TYPE 8600

High Performance Seal

8620 - Double Seal - Dimensional Data

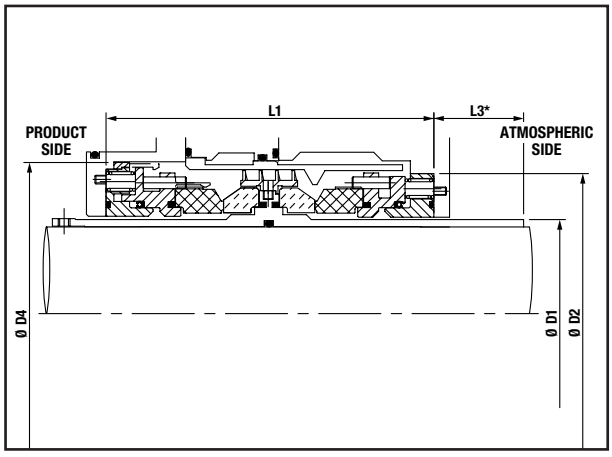

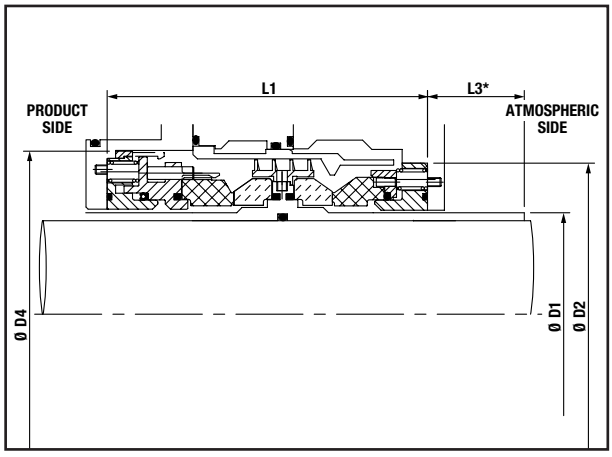

Styles 11, 21

Size Code	D1 mm	D2 mm	D4 mm	L1 mm	L3 min mm
0412	41.2	81.0	94.2	134.6	35
0444	44.4	84.0	97.3	134.6	35
0476	47.6	87.5	100.5	134.6	35
0508	50.8	90.5	103.7	134.6	35
0539	53.9	93.5	107.4	146.6	35
0571	57.1	97.0	110.5	146.6	35
0603	60.3	100.0	113.7	146.6	35
0635	63.5	103.0	116.9	146.6	35
0666	66.6	106.5	120.1	146.6	35
0698	69.8	115.5	129.4	159.6	35
0762	76.2	122.0	135.8	159.6	35
0825	82.5	128.5	142.1	159.6	35
0889	88.9	135.0	148.5	159.6	35
0952	95.2	141.0	154.8	168.6	45
1016	101.6	147.5	161.2	168.6	45
1079	107.9	154.0	167.5	168.6	45
1143	114.3	160.0	173.9	168.6	45
1206	120.6	178.0	193.4	191.6	45
1270	127.0	184.0	199.9	191.6	45
1333	133.3	190.5	206.4	191.6	45
1397	139.7	197.0	212.9	191.6	45
1460	146.0	203.5	218.9	191.6	45
1524	152.4	209.5	225.4	191.6	45
1587	158.7	216.0	231.9	191.6	45
1619	161.9	226.0	244.4	217.6	55
1682	168.2	232.5	250.9	217.6	55
1746	174.6	239.0	257.4	217.6	55
1809	180.9	245.0	263.4	217.6	55
1873	187.3	251.5	269.9	217.6	55
1936	193.6	258.0	276.4	217.6	55
2000	200.0	264.5	282.9	217.6	55
2063	206.3	270.5	288.9	217.6	55

Styles 12, 15, 22

Size Code	D1 mm	D2 mm	D4 mm	L1 mm	L3 min mm
0412	41.2	81.0	94.2	118.6	35
0444	44.4	84.0	97.3	118.6	35
0476	47.6	87.5	100.5	118.6	35
0508	50.8	90.5	103.7	118.6	35
0539	53.9	93.5	107.4	130.6	35
0571	57.1	97.0	110.5	130.6	35
0603	60.3	100.0	113.7	130.6	35
0635	63.5	103.0	116.9	130.6	35
0666	66.6	106.5	120.1	130.6	35
0698	69.8	115.5	129.4	142.6	35
0762	76.2	122.0	135.8	142.6	35
0825	82.5	128.5	142.1	142.6	35
0889	88.9	135.0	148.5	142.6	35
0952	95.2	141.0	154.8	151.6	45
1016	101.6	147.5	161.2	151.6	45
1079	107.9	154.0	167.5	151.6	45
1143	114.3	160.0	173.9	151.6	45
1206	120.6	178.0	193.4	173.6	45
1270	127.0	184.0	199.9	173.6	45
1333	133.3	190.5	206.4	173.6	45
1397	139.7	197.0	212.9	173.6	45
1460	146.0	203.5	218.9	173.6	45
1524	152.4	209.5	225.4	173.6	45
1587	158.7	216.0	231.9	173.6	45
1619	161.9	226.0	244.4	197.6	55
1682	168.2	232.5	250.9	197.6	55
1746	174.6	239.0	257.4	197.6	55
1809	180.9	245.0	263.4	197.6	55
1873	187.3	251.5	269.9	197.6	55
1936	193.6	258.0	276.4	197.6	55
2000	200.0	264.5	282.9	197.6	55
2063	206.3	270.5	288.9	197.6	55

†Note 1:- Size code refers to maximum sleeve OD - column 'D1'
Sleeves to fit metric and imperial shafts.

TYPE 8600

High Performance Seal

Basic Pressure Rating

Dynamic Pressure limits of T8600 Seals on Hydrocarbons - Metric Units

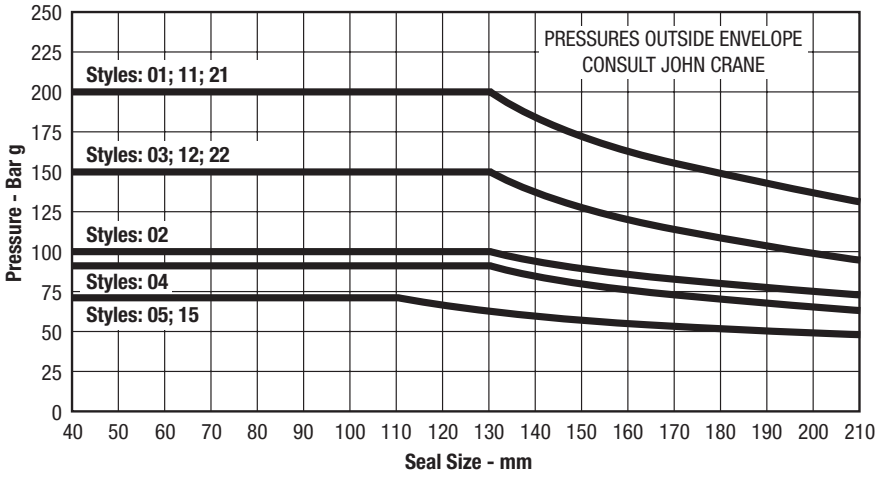

The Basic Pressure Rating is for a standard seal, as shown in the typical arrangement, when installed according to the criteria given in this data sheet and generally accepted industrial practices.

The Basic Pressure Rating assumes stable operation at 3600 rpm in a clean, cool, lubrication, non-volatile liquid with an adequate flush rate, When used with the multiplier factors, the Basic Pressure Rating can be adjusted to provide a conservative estimate of the dynamic pressure rating. For process services outside this range or a more accurate assessment of the dynamic pressure rating, contact John Crane for more information.

Styles – The T8600 Series is a modular range allowing different combinations of inboard and outboard configurations and materials. Each Style is represented by a two digit code: The first designates the inboard configuration, the second - the outboard.

Inboard

0* - Single Seal (see outboard)
1* - Cranite vs. SiC, Carrier Design, LaserFace
2* - Carbon Fibre Reinforced Cranite vs SiC / WC, LaserFace

Outboard

***1** - Cranite vs. SiC, Carrier Design, LaserFace
***2** - Cranite vs. SiC, Thrust Ring Design, LaserFace
***3** - Cranite vs. SiC, Carrier Design
***4** - Cranite vs. SiC, Thrust Ring Design
***5** - Carbon vs. SiC, Thrust Ring Design

Multiplier Factors

	Selection Considerations	Multiplier Factors
Speed	Up to 3600 RPM Above 3600 RPM (to a maximum of 50 m/s) Above 50 m/s	x 1.00 x 3600 / Speed (RPM) Consult John Crane
Sealed Fluid Lubricity	Petrol / Gasoline, Kerosene or better Flashing Hydrocarbons (sg < 0.65), water	x 1.00 x 0.60, x 0.75 (water)
Sealed Fluid Temperature	Up to 80°C / 175°F From 80 to 120°C / 175 to 250°F From 120 to 180°C / 250 to 355°F Above 180°C / 355°F	x 1.00 x 0.90 x 0.80 x 0.65

Temperature Limits

Seal Rings

Cranite vs. SiC\WC:	300°C
Carbon vs. SiC:	250°C

Secondary Seals / Static Seals

Fluorocarbon	200°C (hydrocarbons), 135°C (water)
Polymer Seal	300°C

Europe
Slough, UK
Tel: 44-1753-224000
Fax: 44-1753-224224

Latin America
São Paulo, Brazil
Tel: 55-11-3371-2500
Fax: 55-11-3371-2599

Middle East, Africa, Asia
Dubai, United Arab Emirates
Tel: 971-4-3438940
Fax: 971-4-3438970

North America
Morton Grove, Illinois USA
1-800-SEALING
Tel: 1-847-967-2400
Fax: 1-847-967-3915

smiths

For your nearest John Crane facility, please contact one of the locations above.

If the products featured will be used in a potentially dangerous and/or hazardous process, your John Crane representative should be consulted prior to their selection and use. In the interest of continuous development, John Crane Companies reserve the right to alter designs and specifications without prior notice. It is dangerous to smoke while handling products made from PTFE. Old and new PTFE products must not be incinerated.

©2005 John Crane Print 01/05 **www.johncrane.com** ISO 9001, ISO 14001, ISO/TS 16949 Certified. Details available on request. S-**8600/Eng**