Compact Cartridge Seals

The Easiest Cartridge Seal Solution...Maximised!

smiths

4600 Series

4610

The Best Value...Easiest-to-Install Single O-Ring Cartridge Seal

Optimised Running Face Design

- Premium-grade carbon and silicon carbide are standard.
- Robust pin drive gives positive torque transmission.
- Hydraulically balanced for optimal performance.
- Face design optimised using proprietary computer simulation program technology.

Nonclogging, Crest-to-Crest Wave Spring

- No small, easily clogged, and over-compressed helical coil springs.
- Less prone to corrosion problems.
- Uniform face loading.

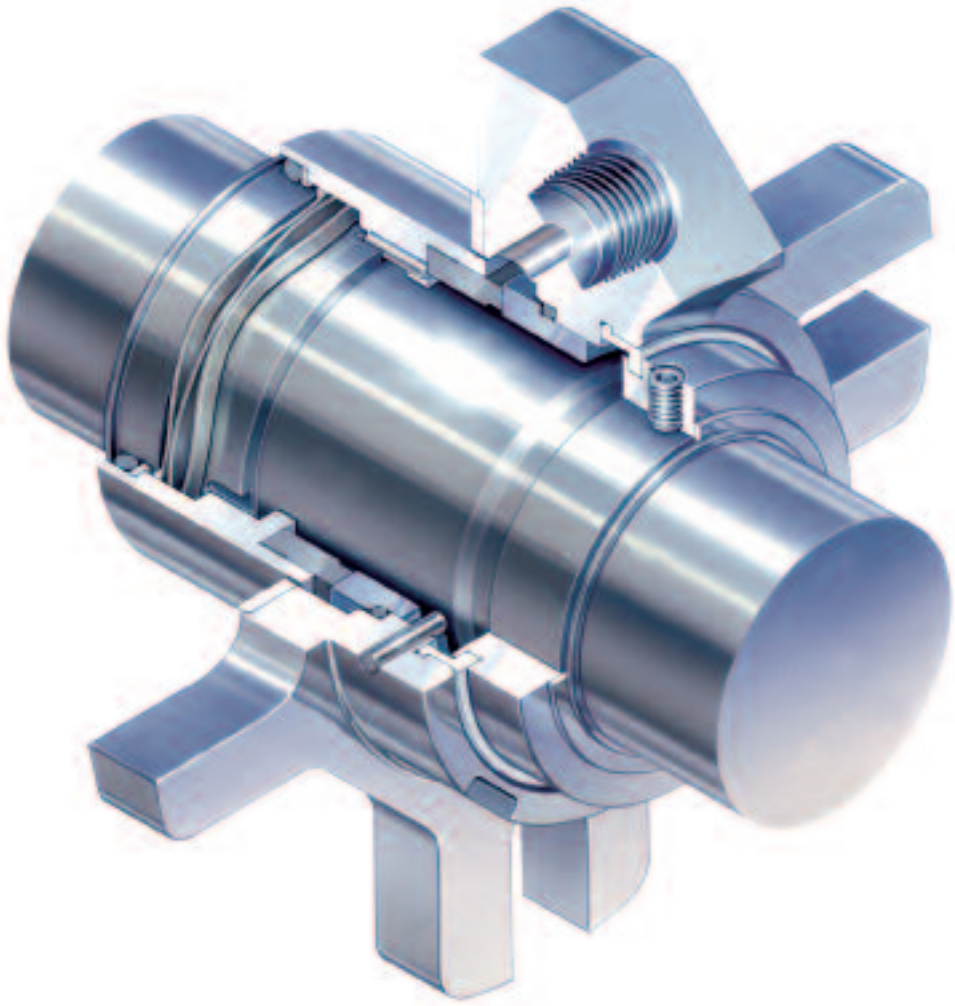

Unique Centralising Ring

- No setting clips to be removed or lost.
- Accurately sets seal axially & radially.
- Helps prevent component damage from overcompression during seal installation.

Compact Cartridge Design

- Four-bolt gland for accurate seal setting.
- Precise investment cast gland plate design.
- Large flush connection drilling ensures optimum flow and allows seal chamber venting for horizontal and vertical applications.
- Factory preset and pressure tested assembly.

CUT LINE FOR SHORT PAGE

4620P

The Best Value...Easiest-to-Install Dual O-Ring Cartridge Seal with Pumping Ring

Dual Seal Arrangement

- Incorporates an elastomer O-ring as the dynamic secondary sealing member.
- Inboard primary and mating ring reverse balance design allows for ID or OD pressurisation, permitting the dual seal to operate as an unpressurised tandem or pressurised double seal.
- Positive seal face closing forces are maintained in an upset pressure reversal situation, providing maximum safety and process containment.

Pumping Ring — STANDARD

- No extra cost.
- No extra inventory to carry.

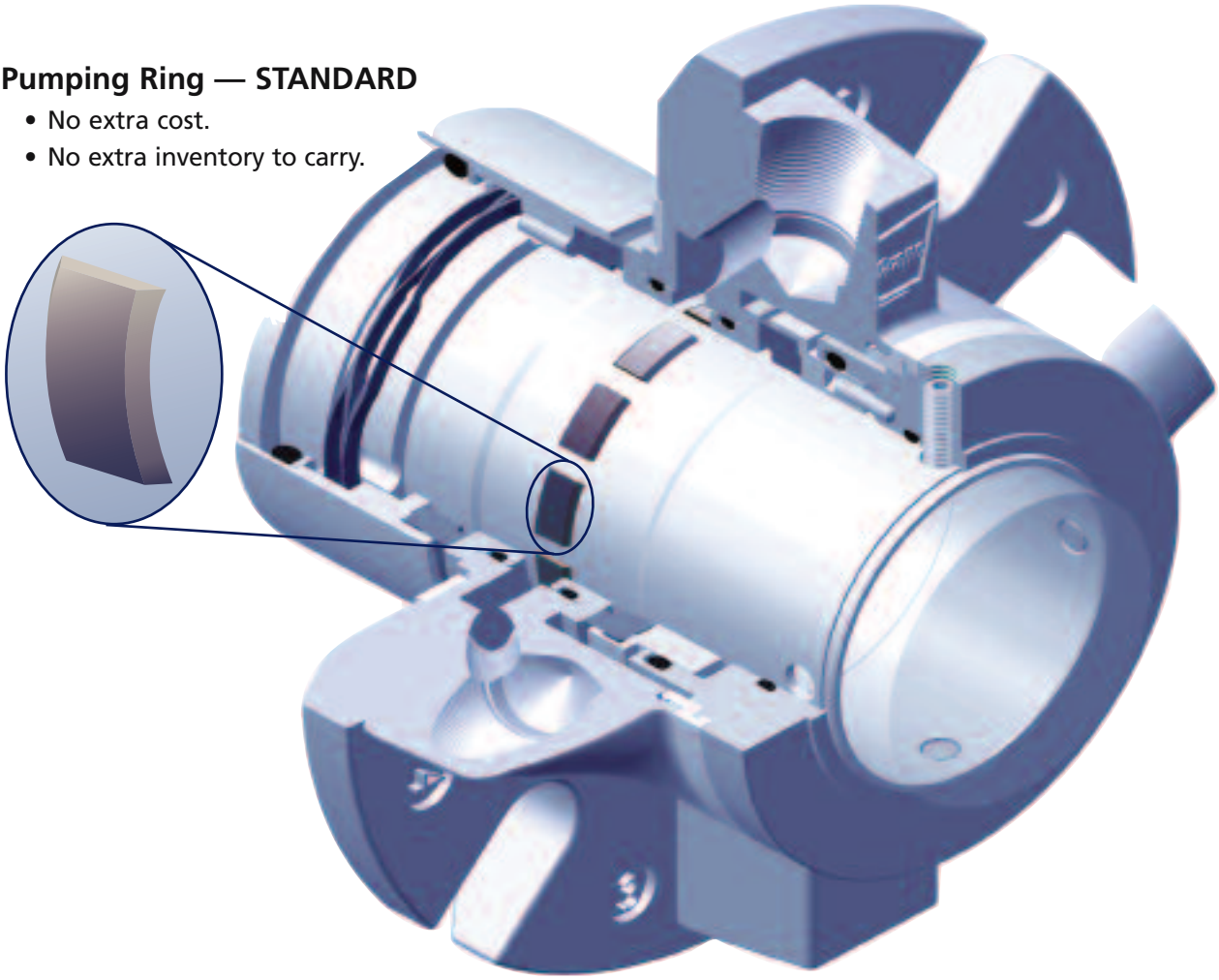

CUT LINE FOR SHORT PAGE

Flow-Optimised Design

- Integral pumping ring arrangement.
- Tangential piping ports.
- Standard configuration provides increased cooling flow and face lubrication, greatly extending seal life.

Cartridge Design

- Factory-preset and pressure-tested assembly.
- The only dual cartridge design with centralising ring eliminating need for external setting clips.
- Eliminates potential assembly and installation errors.
- Increases pump reliability and process efficiency.

4600 Series
Cartridge Seal Solution

High-quality, innovative design reduces installation and maintenance costs for general industrial applications

John Crane combines proven technologies for optimal performance.

The 4600 series cartridge seal is the complete affordable solution for liquid sealing satisfaction in industrial applications.

Type 4600 series meets key industry pump standards, and is designed to permit use in rotating shaft equipment including ANSI/DIN pumps, close-coupled pumps, vertical pumps, and similar rotating shaft equipment.

The 4600 Series outperforms — in every way — all other seals in its class — without exception!

Exceptionally reliable single (4610) or dual (4620P) mechanical seal for traditionally packed equipment and other applications.

It reduces:

- Wasteful Leakage
- Costly Equipment Damage
- Inefficient Pump Downtime
- Time-Consuming Maintenance Problems

Installation is fast and fool-proof. The 4600 series design allows it to fit the most popular metric and inch pumps without modification.

CUT LINE FOR SHORT PAGE

Key Markets

- Water & Wastewater
- Pulp & Paper
- Power Generation
- Chemical
- Food & Beverage
- Pharmaceutical
- Mining
- Steel Production
- General Industrial

The 4600 series cartridge seal is the most affordable sealing solution available. Low cost, ease of installation, and long life are just a few of the benefits you can expect when you purchase a 4600 Series seal.

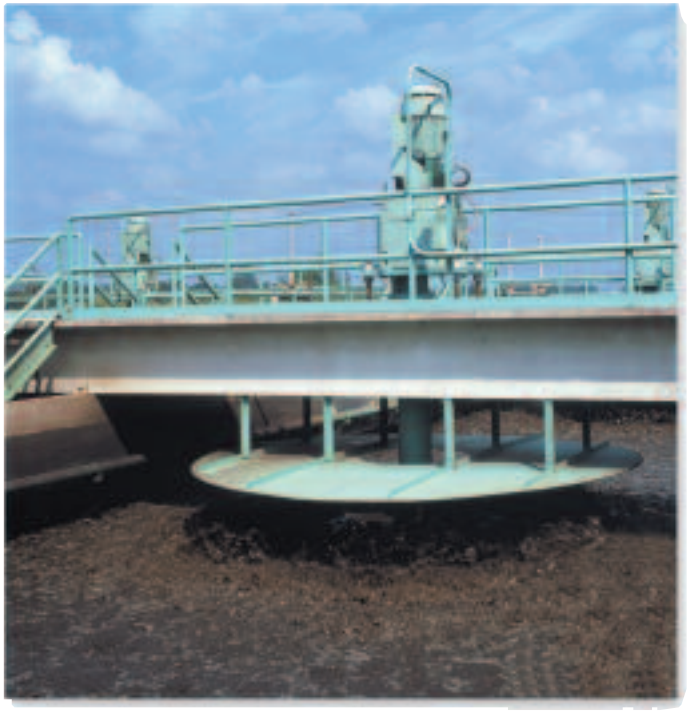

No measuring, no clips, no surprises... just affordable reliability from the world's leading seal manufacturer.

Maximum Pressure Limits

Single Type 4610 / Tandem Type 4620P*
Process Pressure
Up to 140mm / 5.625" : 15 bar g (220 psig)

Double Type 4620P*	
Barrier Fluid Pressure**	Inboard Seal Internal Pressure Rating***
15 bar g (220 psig)	1-2 bar g (15 -30 psig) norm. 15 bar g (220 psig) max.

* Barrier fluid pressure relative to seal chamber pressure (API Plan 52 or 53) determines usage of the cartridge. As a tandem, the buffer pressure is lower than process pressure; or as a double, the barrier pressure is higher than process fluid pressure to be sealed.

** John Crane Engineering recommends barrier fluids having a viscosity less than 14cSt/65 SSU and fluid lubricity that is equal to or better than water at 40°C. It is recommended that the barrier temperature be maintained below 65°C.

*** Inboard seal (Process side) internal pressure rating is defined as the Barrier Fluid Pressure minus the Process Pressure.

Basic Pressure Rating

Pressure rating for 4610 and 4620 inboard seals (graph 1)

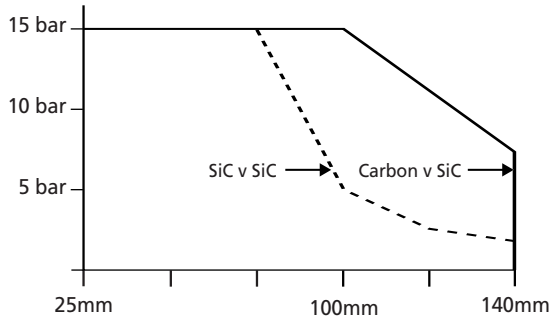

Multiplier Factors – C on SiC

Calculating the maximum pressure for carbon v silicon when operating temperature is above 110 DegC

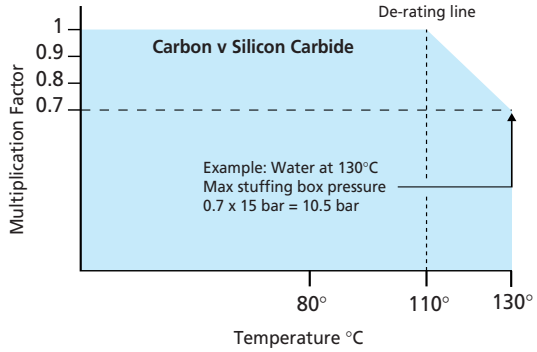

Multiply maximum pressure from graph 1 by de-rating factor on vertical axis to obtain maximum working pressure

Multiplier Factors – SiC on SiC

Calculating the maximum pressure for silicon v silicon when operating temperature is above 80 DegC

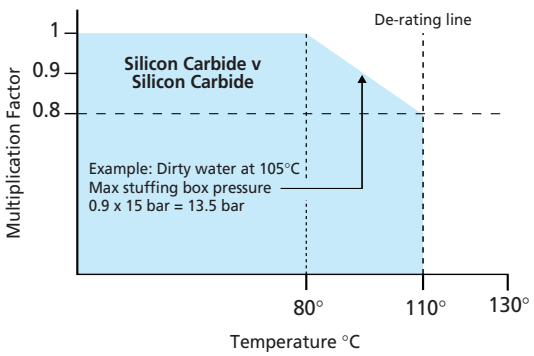

Multiply maximum pressure from graph 1 by de-rating factor on vertical axis to obtain maximum working pressure

Materials of Construction

Component	Standard	*Optional*
Seat/Mating Ring	Silicon Carbide	
Face/Primary Ring	Carbon Graphite	*Silicon Carbide (Inboard Only)*
O-Ring	Fluoroelastomer	*Ethylene Propylene* *Perfluoroelastomer*
Spring	Hastelloy C®	
Gasket, Centering Ring	Glass-filled PTFE	
Hardware	316 Stainless steel or better	

Hastelloy C is a registered trademark of Haynes International, Inc.

Typical Arrangement/Dimensional Data

Type 4610

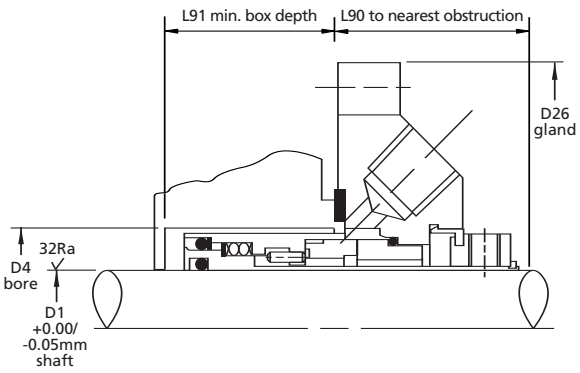

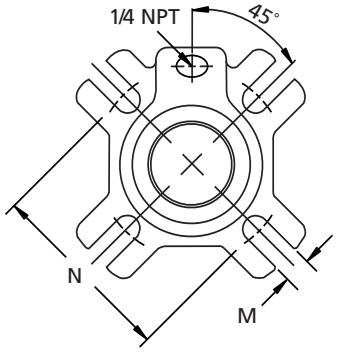

See Installation Instructions for piping arrangements.

Type 4610 Dimensional Data (inches)

Seal Code	D1 Shaft Size	D4 Box Bore Min.	D4 Box Bore Max.	D26	L90	L91 Min.	N Min.	N Max.	M
0254	1.000	1.615	1.940	4.125	1.476	1.260	2.62	3.75	0.437
0285	1.125	1.730	2.060	4.250	1.476	1.260	2.75	3.87	0.437
0317	1.250	1.875	2.190	4.370	1.476	1.260	2.87	4.00	0.437
0349	1.375	2.000	2.310	4.500	1.476	1.260	3.06	4.12	0.437
0381	1.500	2.250	2.500	5.000	1.516	1.299	3.43	4.50	0.563
0412	1.625	2.360	2.500	5.000	1.516	1.299	3.43	4.50	0.563
0444	1.750	2.500	2.625	5.250	1.516	1.299	3.56	4.75	0.563
0476	1.875	2.625	3.000	5.500	1.516	1.299	3.87	5.00	0.563
0508	2.000	2.750	3.000	5.500	1.516	1.299	3.87	5.00	0.563
0539	2.125	2.875	3.310	5.750	1.516	1.299	4.37	5.12	0.563
0571	2.250	3.000	3.310	5.750	1.516	1.299	4.37	5.12	0.689
0603	2.375	3.130	3.560	6.000	1.516	1.299	4.62	5.37	0.689
0635	2.500	3.250	3.875	6.250	1.535	1.417	4.87	5.62	0.689
0666	2.625	3.500	3.875	6.250	1.535	1.417	4.87	5.62	0.689
0698	2.750	3.740	3.875	6.250	1.535	1.417	4.87	5.62	0.689
0730	2.875	4.000	4.500	8.110	1.811	1.673	5.71	6.59	0.811
0762	3.000	4.000	4.500	8.110	1.811	1.673	5.71	6.59	0.811
0793	3.125	4.252	4.748	8.110	1.811	1.673	5.94	6.59	0.811
0825	3.250	4.252	4.748	8.110	1.811	1.673	5.94	6.59	0.811
0857	3.375	4.370	4.874	8.110	1.811	1.673	6.06	6.59	0.811
0889	3.500	4.500	5.000	8.504	1.811	1.673	6.22	6.98	0.811
0920	3.625	4.626	5.118	8.504	1.811	1.673	6.30	6.98	0.811
0952	3.750	4.752	5.252	9.685	1.811	1.673	6.46	8.17	0.811
0984	3.875	4.874	5.374	9.685	1.811	1.673	6.57	8.17	0.811
1016	4.000	5.000	5.512	9.685	1.811	1.673	6.73	8.17	0.811
1047	4.125	5.252	5.906	9.685	2.441	1.732	7.13	8.80	0.811
1079	4.250	5.252	5.906	9.685	2.441	1.732	7.13	8.80	0.811
1111	4.375	5.500	6.102	9.685	2.441	1.732	7.40	8.80	0.811
1143	4.500	5.500	6.102	9.685	2.441	1.732	7.40	8.80	0.811
1174	4.625	5.752	6.378	10.472	2.441	1.732	7.64	8.80	0.811
1206	4.750	5.752	6.378	10.472	2.441	1.732	7.64	8.80	0.811
1238	4.875	6.299	6.929	10.472	2.441	1.732	8.27	9.98	0.811
1270	5.000	6.299	6.929	10.472	2.441	1.732	8.27	9.98	0.811
1301	5.125	6.299	6.929	10.472	2.441	1.732	8.27	9.98	0.811
1333	5.250	6.850	7.480	11.654	2.441	1.732	8.90	10.84	0.937
1365	5.375	6.850	7.480	11.654	2.441	1.732	8.90	10.84	0.937
1397	5.500	6.850	7.480	11.654	2.441	1.732	8.90	10.84	0.937
1428	5.625	6.850	7.480	11.654	2.441	1.732	8.90	10.84	0.937

Type 4610 Dimensional Data (metric)

Seal Code	D1 Shaft Size	D4 Box Bore Min.	D4 Box Bore Max.	D26	L90	L91 Min.	N Min.	N Max.	M
0240	24	40.0	49.2	104.8	37.5	32.0	66.7	95.3	11.1
0250	25	41.0	49.2	104.8	37.5	32.0	66.7	95.3	11.1
0280	28	44.0	52.4	108.0	37.5	32.0	69.9	98.4	11.1
0300	30	46.0	55.6	111.0	37.5	32.0	73.0	101.6	11.1
0320	32	47.6	55.6	111.0	37.5	32.0	73.0	101.6	11.1
0330	33	49.0	58.7	114.3	37.5	32.0	77.8	104.8	11.1
0350	35	50.8	58.7	114.3	37.5	32.0	77.8	104.8	11.1
0380	38	57.15	63.5	127.0	38.5	33.0	87.3	114.3	14.3
0400	40	60.0	63.5	127.0	38.5	33.0	87.3	114.3	14.3
0430	43	63.0	66.7	133.4	38.5	33.0	90.5	120.7	14.3
0450	45	63.5	66.7	133.4	38.5	33.0	90.5	120.7	14.3
0480	48	66.7	76.2	139.7	38.5	33.0	98.4	127.0	14.3
0500	50	69.8	76.2	139.7	38.5	33.0	98.4	127.0	14.3
0530	53	73.0	84.1	146.0	38.5	33.0	111.1	130.2	17.5
0550	55	73.0	84.1	146.0	38.5	33.0	111.1	130.2	17.5
0580	58	79.4	90.5	152.4	38.5	33.0	117.5	136.5	17.5
0600	60	79.4	90.5	152.4	38.5	33.0	117.5	136.5	17.5
0630	63	82.6	98.4	158.8	39.0	36.0	123.8	142.9	17.5
0650	65	88.9	98.4	158.8	39.0	36.0	123.8	142.9	17.5
0700	70	95.0	98.4	158.8	39.0	36.0	123.8	142.9	17.5
0750	75	101.6	114.3	206	46	42.5	145	167	20.6
0800	80	108.0	120.6	206	46	42.5	151	167	20.6
0850	85	111.0	123.8	206	46	42.5	154	167	20.6
0900	90	117.5	130.0	216	46	42.5	160	177	20.6
0950	95	120.7	133.4	246	46	42.5	164	207	20.6
1000	100	127.0	140.0	246	46	42.5	171	207	20.6
1050	105	133.4	150	246	62	44	181	223	20.6
1100	110	139.7	155	246	62	44	188	223	20.6
1150	115	139.7	155	246	62	44	188	223	20.6
1200	120	146.1	162	266	62	44	194	223	20.6
1250	125	160.0	176	266	62	44	210	253	20.6
1300	130	160.0	176	266	62	44	210	253	20.6
1350	135	174.0	190	296	62	44	226	275	23.8
1400	140	174.0	190	296	62	44	226	275	23.8

Contact John Crane if enlarged bore versions are required.

Typical Arrangement/Dimensional Data

Type 4620P

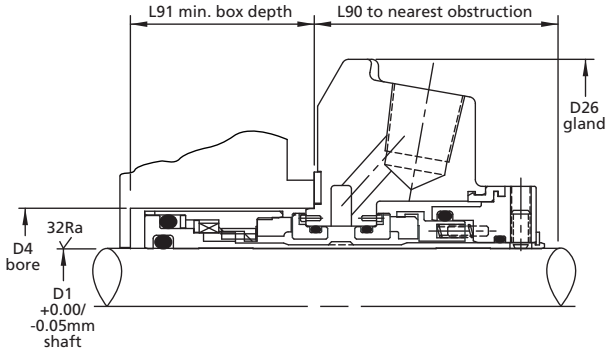

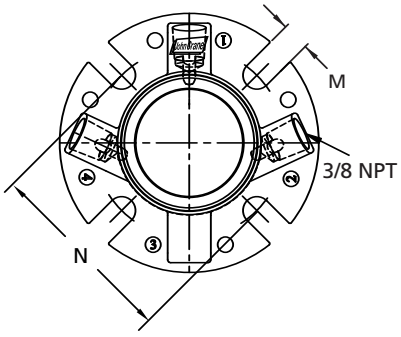

See Installation Instructions for piping arrangements.

CUT LINE FOR SHORT PAGE

Type 4620P Dimensional Data (inches)

D1 Shaft Size	D4 Box Bore Min.	D4 Box Bore Max.	D26	L90	L91 Min.	N Min.	N Max.	M
*1.000	1.625	1.889	4.000	2.000	1.635	2.80	3.25	0.525
1.125	1.750	2.015	4.125	2.125	1.603	2.93	3.38	0.525
1.250	1.875	2.294	4.250	2.125	1.603	3.21	3.50	0.525
1.375	2.000	2.421	4.375	2.125	1.603	3.34	3.63	0.525
1.500	2.250	2.680	4.875	2.187	1.680	3.60	4.13	0.525
1.625	2.375	2.812	5.000	2.187	1.680	3.77	4.25	0.562
1.750	2.500	2.918	5.250	2.187	1.680	3.87	4.50	0.562
1.875	2.625	2.918	5.250	2.187	1.680	3.87	4.50	0.562
2.000	2.750	3.015	5.500	2.375	1.711	4.00	4.75	0.562
2.125	2.875	3.360	5.859	2.375	1.711	4.47	4.91	0.687
2.250	3.000	3.485	6.500	2.475	1.711	4.57	5.55	0.687
2.375	3.125	3.610	6.500	2.528	1.711	4.72	5.55	0.687
2.500	3.375	3.891	6.750	2.625	1.703	5.00	5.80	0.687
2.625	3.687	4.062	6.750	2.562	1.727	5.17	5.80	0.687
2.750	3.687	4.062	6.750	2.562	1.727	5.17	5.80	0.687

***Utilises external holding clips**

Type 4620P Dimensional Data (metric)

D1 Shaft Size	D4 Box Bore Min.	D4 Box Bore Max.	D26	L90	L91 Min.	N Min.	N Max.	M
*24	41.0	48.0	101.6	50.8	41.5	71	83	13.3
*25	41.0	48.0	101.6	50.8	41.5	71	83	13.3
28	44.0	51.2	104.8	54.0	40.7	74	86	13.3
30	46.0	58.3	108.0	54.0	40.7	82	89	13.3
32	47.6	58.3	108.0	54.0	40.7	82	89	13.3
33	50.8	61.5	111.1	54.0	40.7	85	92	13.3
35	50.8	61.5	111.1	54.0	40.7	85	92	13.3
38	57.2	68.1	123.8	55.5	42.7	91	105	13.3
40	60.0	71.4	127.0	55.5	42.7	96	108	14.3
43	63.5	74.1	133.4	55.5	42.7	98	114	14.3
45	63.5	74.1	133.4	55.5	42.7	98	114	14.3
48	66.7	74.1	133.4	55.5	42.7	98	114	14.3
50	69.9	76.6	139.7	60.3	43.5	102	121	14.3
53	73.0	85.3	148.8	60.3	43.5	114	125	17.5
55	73.0	85.3	148.8	60.3	43.5	114	125	17.5
58	79.4	91.7	165.1	64.2	43.5	120	141	17.5
60	79.4	91.7	165.1	64.2	43.5	120	141	17.5
63	85.7	98.8	171.5	66.7	43.3	127	147	17.5
65	85.7	98.8	171.5	66.7	43.3	127	147	17.5
70	93.6	103.2	171.5	65.1	43.9	131	147	17.5

***Utilises external holding clips**

Contact John Crane if enlarged bore versions are required.

Europe
Slough, UK
Tel: 44-1753-224000
Fax: 44-1753-224224

North America
Morton Grove
Tel: 1-847-967-2400
Fax: 1-847-967-3915

Houston
Tel: 1-713-944-6690
Fax: 1-713-946-8252

Latin America
São Paulo, Brazil
Tel: 55-11-3371-2500
Fax: 55-11-3371-2599

Middle East & Africa
Dubai, United Arab Emirates
Tel: 971-4-3438940
Fax: 971-4-3438970

Asia
Singapore
Tel: 65-6512-5200
Fax: 65-6512-5233

For your nearest John Crane facility, please contact one of the locations above.

If the products featured will be used in a potentially dangerous and/or hazardous process, your John Crane representative should be consulted prior to their selection and use.
In the interest of continuous development, John Crane Companies reserve the right to alter designs and specifications without prior notice. It is dangerous to smoke while handling products made from PTFE. Old and new PTFE products must not be incinerated.

©2006 John Crane Print 02/06 **www.johncrane.com** ISO 9001, ISO 14001, ISO/TS 16949 Certified. Details available on request. B-**4600/Eng**

smiths