TYPE 6

Elastomer Bellows Seal

A – Seat Cup
B – Mating Ring (Seat)
C – Primary Ring
D – Spring
E – Bellows
F – Drive Ring
G – Drive Sleeve
H – Ferrules

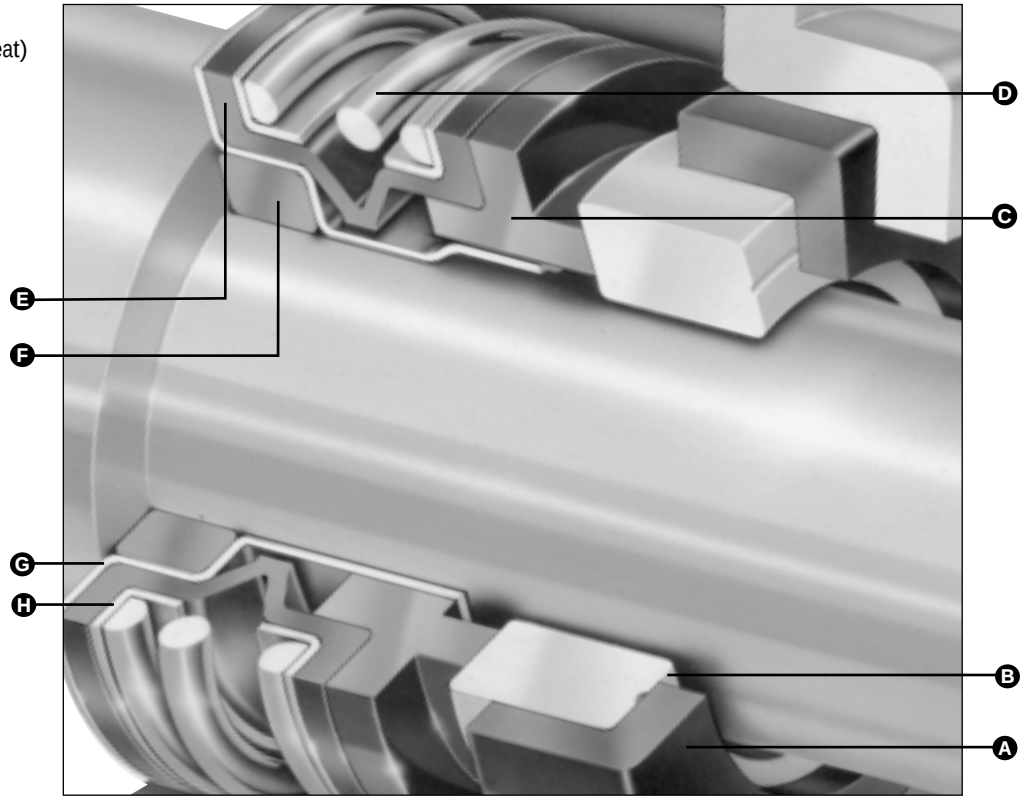

Product Description

The Type 6 is a compact, unitized, single spring, elastomer bellows mechanical seal.

- Type 6 Seals are designed for use in small centrifugal water pumps, deep and shallow well jet pumps, swimming pool pumps and wastewater pumps.

Design Features

- **Seal Design:**
  One piece design enhances production line installation and allows for ease of replacement.
- **Sealing Faces:**
  Precision surface finish optimizes the service life and reliability. Materials designed to meet the broadest range of applications.
- **Drive Ring:**
  Elastomer drive ring is pre-loaded to provide positive drive and tight seal along the shaft.
- **Flexible Bellows:**
  Full convolution elastomer bellows provides maximum flexibility in compensating for shaft movement and wear.
- **Spring:**
  Coil spring and ferrules provide consistent face loading through extreme working conditions.

Performance Capabilities

- Temperature:
  -45°C to 205°C/-49°F to 400°F
- Pressure:
  ID: 7.20 psi (0.5 bar)
  OD: up to 75 psig (5 bar g)
- Speed:
  Up to 1000 fpm/5m/s
  Up to 3600 rpm

Industries Served

- Pool and Spa
- Industrial, Commercial and Residential Water Systems
- Heating and Cooling

TYPE 6

Elastomer Bellows Seal

Type 6 Typical Arrangement/Dimensional Data

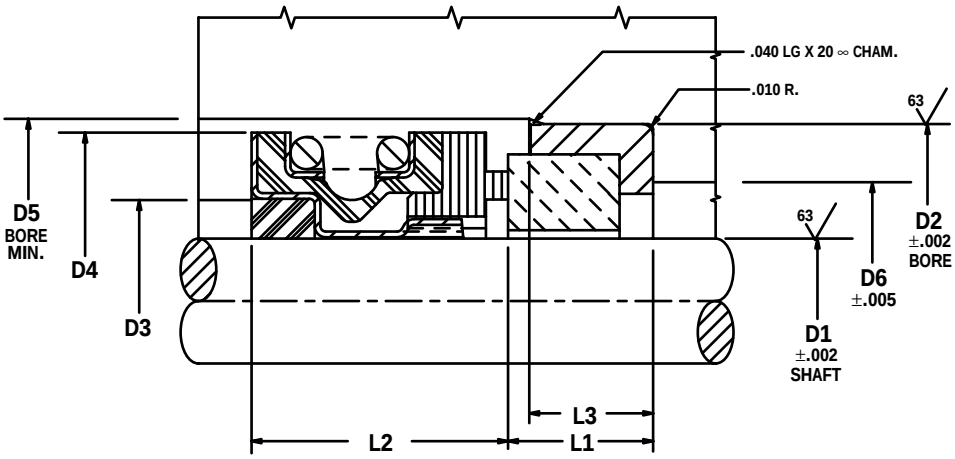

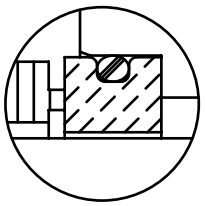

ALTERNATE O-RING SEAT

Type 6 Dimensional Data (inches)

Seal Size/D1 (inches)	D2	D3	D4	D5	D6	L1	L2	L3
0.375	1.000	0.812	1.062	1.312	0.750	0.312	0.656	0.250
0.437	1.000	0.812	1.062	1.312	0.750	0.312	0.656	0.250
0.500	1.000	0.812	1.062	1.312	0.750	0.312	0.656	0.250
0.562	1.250	0.937	1.218	1.500	0.937	0.406	0.718	0.343
0.625	1.250	0.937	1.218	1.500	0.937	0.406	0.718	0.343
0.687	1.375	1.062	1.343	1.625	1.062	0.406	0.718	0.343
0.750	1.375	1.062	1.343	1.625	1.062	0.406	0.718	0.343
0.875	1.625	1.312	1.687	2.000	1.312	0.437	0.812	0.375
1.000	1.625	1.312	1.687	2.000	1.312	0.437	0.812	0.375

TYPE 6

Elastomer Bellows Seal

Criteria for Installation

Shaft/Sleeve	Limits
Surface Finish	32 to 63 Ra
Out of Roundness	0.051mm/.002"
Axial End Play	± 0.13mm/0.005"

Elastomer Temperature Limits

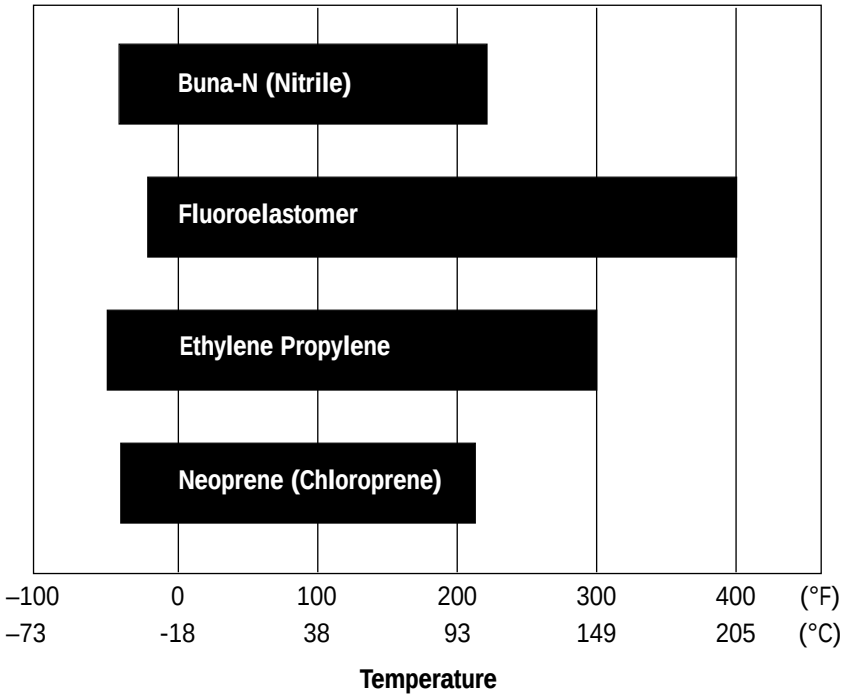

TYPE 6

Elastomer Bellows Seal

Materials of Construction

SEAL COMPONENTS	MATERIALS
Primary Ring (Washer)	Cranecarb (Phenolic Carbon Graphite) Carbon
Mating Ring (Seat)	Ceramic Silicon Carbide Niresist
Hardware	Stainless Steel
Secondary Seals (Bellows, Drive Ring, Seat Cup, O-Ring)	Buna-N (Nitrile) Neoprene® (Chloroprene) Ethylene Propylene Fluoroelastomer
Spring	Stainless Steel

Neoprene is a registered trademark of DuPont.

Item. #

1. – Seat Cup
2. – Mating Ring (Seat)
3. – Primary Ring
4. – Spring
5. – Bellows
6. – Drive Ring
7. – Drive Sleeve
8. – Ferrules
9. – O-Ring

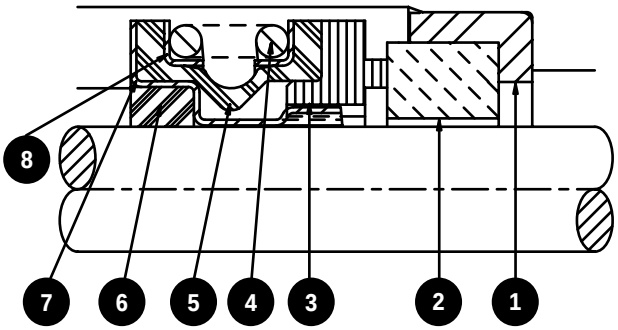

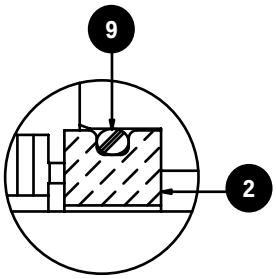

ALTERNATE O-RING SEAT

Asia Pacific
Singapore
Tel: 65-861-1288
Fax: 65-862-4117

Europe, Middle East, Africa
Slough, UK
Tel: 44-1753-224000
Fax: 44-1753-224224

Latin America
São Paulo, Brazil
Tel: 55-11-3049-9979
Fax: 55-11-3849-4511

North America
Morton Grove, Illinois USA
1-800-SEALING
Tel: 1-847-967-2400
Fax: 1-847-967-3915

smiths
A part of Smiths Group plc

For your nearest John Crane facility, please contact one of the locations above.

If the products featured will be used in a potentially dangerous and/or hazardous process, your John Crane representative should be consulted prior to their selection and use. In the interest of continuous development, John Crane Companies reserve the right to alter designs and specifications without prior notice. It is dangerous to smoke while handling products made from PTFE. Old and new PTFE products must not be incinerated.

©2001 John Crane Print 9/01